Ruijie Reyee RG-EG1510XS Router

Installation Guide

Document Version: V1.1
Date: July 29, 2024
Copyright © 2024 Ruijie Networks

Copyright

Copyright © 2024 Ruijie Networks

All rights are reserved in this document and this statement.

Without the prior written consent of Ruijie Networks, any organization or individual shall not reproduce, extract, back up, modify, or propagate the content of this document in any manner or in any form, or translate it into other languages or use some or all parts of the document for commercial purposes.

Ruijie, Reyee and other Ruijie networks logos are trademarks of Ruijie Networks.

All other trademarks or registered trademarks mentioned in this document are owned by their respective owners.

Disclaimer

The products, services, or features you purchase are subject to commercial contracts and terms, and some or all of the products, services, or features described in this document may not be available for you to purchase or use. Except for the agreement in the contract, Ruijie Networks makes no explicit or implicit statements or warranties with respect to the content of this document.

The names, links, descriptions, screenshots, and any other information regarding third-party software mentioned in this document are provided for your reference only. Ruijie Networks does not explicitly or implicitly endorse or recommend the use of any third-party software and does not make any assurances or guarantees concerning the applicability, security, or legality of such software. You should choose and use third-party software based on your business requirements and obtain proper authorization. Ruijie Networks assumes no liability for any risks or damages arising from your use of third-party software.

The content of this document will be updated from time to time due to product version upgrades or other reasons, Ruijie Networks reserves the right to modify the content of the document without any notice or prompt.

This manual is designed merely as a user guide. Ruijie Networks has tried its best to ensure the accuracy and reliability of the content when compiling this manual, but it does not guarantee that the content of the manual is completely free of errors or omissions, and all the information in this manual does not constitute any explicit or implicit warranties.

Preface

Intended Audience

This document is intended for:

- Network engineers
- Technical support and servicing engineers
- Network administrators

Technical Support

- The official website of Ruijie Reyee: https://reyee.ruijie.com
- Technical Support Website: https://reyee.ruijie.com/en-global/support
- Case Portal: https://www.ruijienetworks.com/support/caseportal
- Community: https://community.ruijienetworks.com
- Technical Support Email: service_rj@ruijienetworks.com
- Online Robot/Live Chat: https://reyee.ruijie.com/en-global/rita

Conventions

1. Signs

This document also uses signs to indicate some important points during the operation. The meanings of these signs are as follows:

Caution

An alert that calls attention to safety instruction that if not understood or followed can result in personal injury.

Warning

An alert that calls attention to important rules and information that if not understood or followed can result in data loss or equipment damage.

Note

An alert that calls attention to essential information that if not understood or followed can result in function failure or performance degradation.

Instruction

An alert that contains additional or supplementary information that if not understood or followed will not lead to serious consequences.

Specification

An alert that contains a description of product or version support.

2. Note

This manual provides installation steps, troubleshooting, technical specifications, and usage guidelines for cables and connectors. It is intended for users who want to understand the above and have extensive experience in network deployment and management, and assume that users are familiar with related terms and concepts.

Contents

Preface I

1 Product Introduction 1

1.1 Overview 1

1.2 Package Contents 1

1.3 Appearance 2

1.4 Technical Specifications 5

2 Preparing for Installation 7

2.1 Safety Precautions 7

2.1.1 General Safety Precautions 7

2.1.2 Handling Safety 7

2.1.3 Electric Safety 7

2.1.4 Electrostatic Discharge Safety 8

2.1.5 Battery 8

2.2 Installation Environment Requirements 9

2.2.1 Bearing Requirements 9

2.2.2 Ventilation Requirements 9

2.2.3 Space Requirements 9

2.2.4 Temperature/Humidity Requirements 10

2.2.5 Cleanliness Requirements 10

2.2.6 Grounding Requirements 11

2.2.7 Anti-interference Requirements 12

2.2.8 Lightning Protection Requirements 12

2.2.9 Installation Site Requirements 12

2.3 Cabinet Installation Requirements....12
2.4 Notes for Connecting Optical Cables....13
2.5 Tools....13
3 Installing the Router....15
3.1 Installation Procedure....15
3.2 Before You Begin....16
3.3 (Optional) Installing the Hard Disk Drive....16
3.4 Precautions....17
3.5 Installing the Device....18
3.5.1 Mounting the Device into a Cabinet....18
3.5.2 Mounting the Device on a Workbench....19
3.6 Connecting the Ground Cable of the Device....19
3.7 Connecting the Power Cord....19
3.8 Connecting Cables....20
3.9 Bundling Cables....20
3.9.1 Precautions....20
3.9.2 Bundling Steps....20
3.10 Verifying Installation....21
3.10.1 Verifying the Device....21
3.10.2 Verifying Cable Connection....21
3.10.3 Verifying Power Supply....21
4 Verifying Operating Status....22
4.1 Setting up Configuration Environment....22
4.2 Checklist....22

4.2.1 Checklist before Power-on 22
4.2.2 Checklist after Power-on 22
4.3 Log In to the Web Interface 23
5 Troubleshooting 24
5.1 General Troubleshooting Procedure 24
5.2 Common Troubleshooting Procedures 24
5.2.1 Password Loss 24
5.2.2 System LED Error 24
6 Appendix 25
6.1 Connectors and Media 25
6.2 Mini-GBIC and 10GE SFP+ Module Specifications 26
6.3 Cabling Recommendations 32

1 Product Introduction

1.1 Overview

The RG-EG1510XS router is data communications product of Ruijie Networks, developed independently with full ownership of intellectual property rights. This router is a high-performance egress router suitable for medium and large hotels, living quarters, HQ-branch enterprises, and chain businesses. With a recommended egress bandwidth of 4000 Mbps, it is capable of meeting the demands of high-speed bandwidth usage and can support up to 1500 concurrent users. The RG-EG1510XS router offers flexible multi-WAN and policy-based routing features, rich online behavior management policies, and easy-to-use high-performance VPN bonding. As the master device of a self-organizing network, this router can work with managed switches and wireless access points to achieve network-wide centralized configuration. It allows for remote management of user networks and facilitates remote diagnosis of network faults through the use of a dedicated app.

Table 1-1 RG-EG1510XS Specifications

Model	10/100/1000Base-T Port with Auto-Negotiation	10/100/1000/2500Base-T Port with Auto-Negotiation	10G SFP+ Port	Power Supply
RG-EG1510XS	4 (1×Fixed LAN Port, 3×LAN/WAN Switchable Port)	4 (1×Fixed WAN Port, 3×LAN/WAN Switchable Port)	2 (2×LAN/WAN Switchable Port)	Fixed power supply module

1.2 Package Contents

Table 1-2 Package Contents of RG-EG1510XS

No.	Item	Quantity
1	RG-EG1510XS Router	1
2	Mounting Bracket	2
3	Foot Pad	4
4	GB819-85 M4 × 8 mm screw	8
5	Power Cord	1
6	Power Cord Retainer Clip	1
7	User Manual	1
8	Warranty Card	1
9	TGM3-10 Screw	4
10	Grounding Cable	1

1.3 Appearance

Figure 1-1 Appearance of RG-EG1510XS

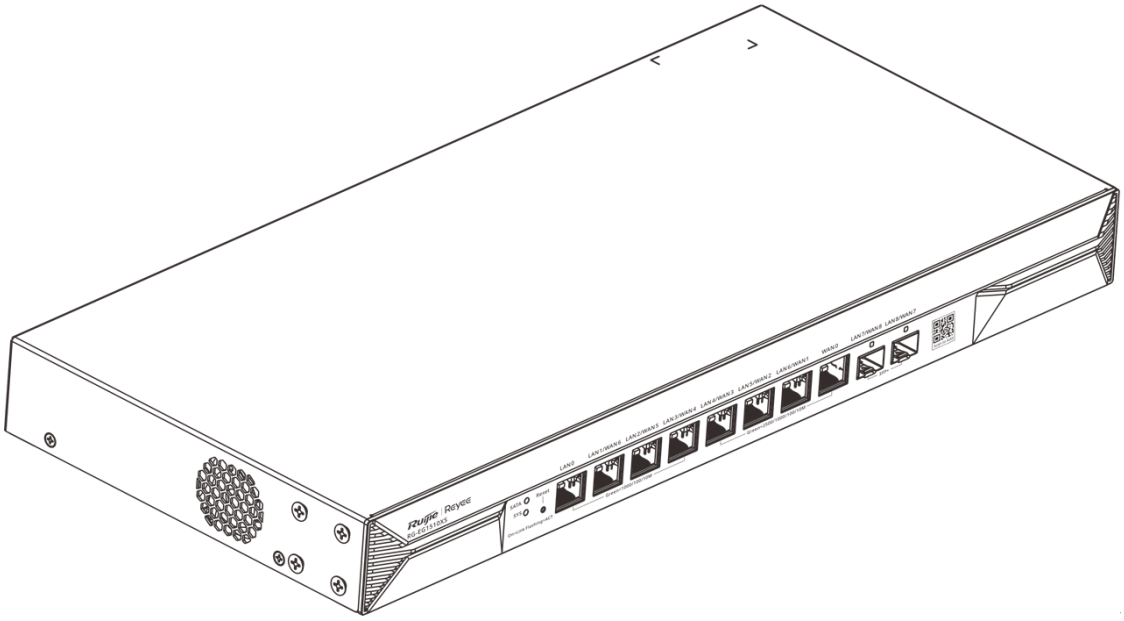

Figure 1-2 Front Panel of RG-EG1510XS

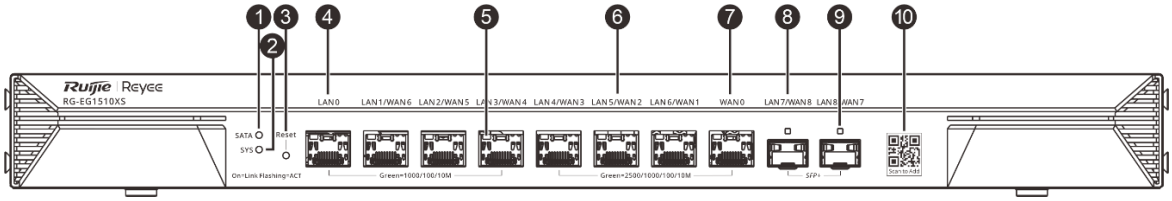

Table 1-3 LEDs, Buttons and Ports

Mark	Item	Description
1	SATA LED	Indicates the working status of the hard disk drive. ● Solid green: The hard disk drive is in place. ● Blinking green: A read/write operation is performed.

Mark	Item	Description
2	System LED	Indicates the working status of the system. ● Off: The system is powered off. ● Fast blinking green (8 blinks per second): The system is starting up. ● Solid green: The system is operating normally. ● Slow blinking green (1 blink every two seconds): The system is not connected to the cloud. ● Blinking green (2 blinks per second): The system is resetting/upgrading firmware. ● Blinking red (2 blinks per second): The firmware is corrupted.
3	Reset button	Restarts the device or resets the device to factory settings. ● Press and hold for less than 2 seconds: The system restarts. ● Press and hold the button for more than 5 seconds until the system status LED starts blinking: The system restores to factory defaults and restarts.
4	LAN port	LAN0 is a 10/100/1000Base-T port with auto-negotiation and is a fixed LAN port.
5	Link/ACT LED for electrical port	Indicates the working status of the electrical port. ● Solid green: A link is set up on the port. ● Blinking green: The port is transmitting and receiving data.
6	LAN/WAN port	LAN1 to LAN3 are 10/100/1000Base-T ports with auto-negotiation, and can be used as WAN ports. LAN4 to LAN6 are 10/100/1000/2500Base-T ports with auto-negotiation, and can be used as WAN ports.
7	WAN port	A 10/100/1000/2500Base-T port with auto-negotiation connected to a DSL or cable modem for Internet access.
8	LAN/WAN optical port	LAN7 and LAN8 are 10G/1G Base-X SFP ports, and can be used as WAN ports.
9	Link/ACT LED for optical port	Indicates the working status of the optical port. ● Solid green: A link is set up on the port. ● Blinking green: The port is transmitting and receiving data.
10	QR code	Scan the QR code to download the dedicated app.

Note

After the router is reset, the default management address is http://192.168.110.1 (default password: admin).

Figure 1-3 Back Panel of RG-EG1510XS

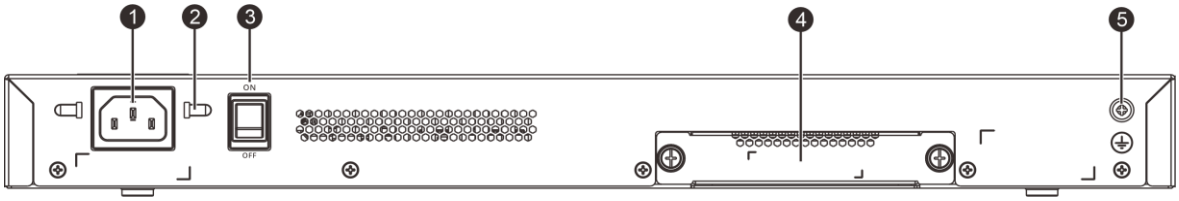

Table 1-4 LEDs, Buttons and Ports

Mark	Item	Description
1	Three-pin AC power cord connector	Connects the power cord to supply power to the device.
2	Power cord retainer clip hole	Holds the power cord retainer clip.
3	Power switch	Controls the device's power status. Before removing the power cord, turn off the power switch, especially if the device contains a hard disk drive.
4	Expansion slot	Holds a hard disk drive.
5	Grounding point	Connects to the environmental grounding system through a grounding cable to provide grounding protection to the device.

Caution

- You are advised to use an original Western Digital hard disk WD10SPZX to ensure compatibility.
- If the RG-EG1510XS router contains an optional hard disk drive, handle the device with care to prevent any vibration or shock that could potentially damage the hard disk drive.
- If a hard disk drive is installed in the RG-EG1510XS router, power down the device correctly by switching off the power switch first, waiting for the SYS LED to turn off, and then unplugging the power cord to prevent any harm to the hard disk.

Figure 1-4 Label of RG-EG1510XS

The label is on the bottom of the RG-EG1510XS router, as shown in the following figure.

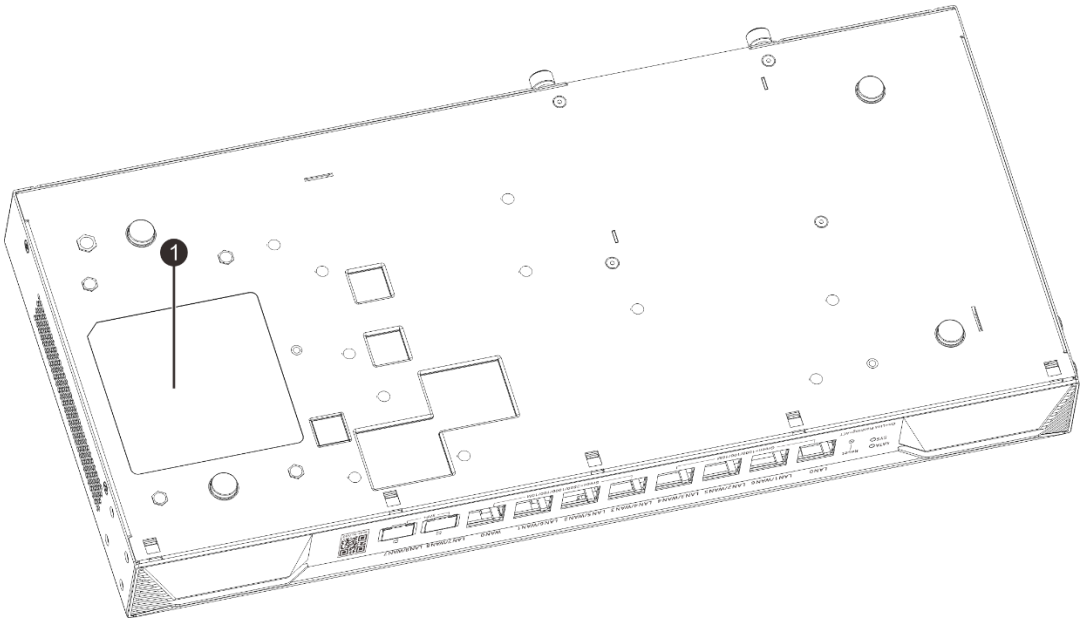

Table 1-5 Label of RG-EG1510XS

Mark	Item	Description
1	Label	Contains the product name, model, I/O parameters, default IP address, etc.

1.4 Technical Specifications

Table 1-6 Technical Specifications

Model	RG-EG1510XS
CPU	Quad-core processor, 1.8 GHz clock rate
Flash Memory	128 MB
eMMC	8 GB
SDRAM	DDR4 4GB
Fixed Service Port	Electrical ports: 8 4 × 10/100/1000Base-T ports with auto-negotiation, and 4 × 10/100/1000/2500Base-T ports with auto-negotiation By default, LAN0 to LAN6 are LAN ports, while WAN0 is a WAN port. LAN1 to LAN6 can be used as WAN ports. 2 × 1000Base-X/10GBase-X SFP+ ports LAN7 and LAN8 can be used as WAN ports.

Power Supply	AC input: Rated voltage range: 100 V AC to 240 V AC Max. voltage range: 90 V AC to 264 V AC Frequency: 50 Hz to 60 Hz Rated current: 1.5 A Power cord: 10 A power cord
Ground-Leakage Current	≤ 3.5 mA
EEE	Supported
PoE	Not supported
Max. Power Consumption	≤ 20 W
Operating Temperature	0ºC to 40ºC (32°F to 104°F)
Storage Temperature	-40ºC to 75ºC (–40°F to 167°F)
Operating Humidity	10% to 90% RH (non-condensing)
Storage Humidity	5% to 95% RH (non-condensing)
Fan	N/A
Overtemperature	Not supported
Certification	CE, FCC
Dimensions (W x D x H)	440 mm × 210 mm × 43.6 mm (17.32 in. × 8.27 in. × 1.72 in.) (panel included)
Net Weight	3.0 kg (6.61 lbs.) (packages not included)

Warning

- Operation of this equipment in a residential environment could cause radio interference.
- This equipment is not suitable for use in locations where children are likely to be present.

Warning

Double Pole/Neutral Fusing!

Electrical shock hazard. The circuit breaker is on the neural wire of the grid power supply. Cut off the grid power supply to disconnect each phase of the conductor.

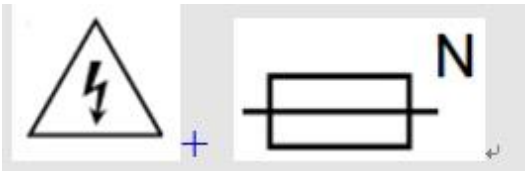

2 Preparing for Installation

2.1 Safety Precautions

Note

- The devices mentioned in this manual cannot be mounted to a wall.
- To avoid personal injury and device damage, carefully read the safety precautions before you install the device.
- The following safety precautions may not cover all possible dangers.

2.1.1 General Safety Precautions

- Do not place the device in a wet position, and keep the device away from liquid. Keep the chassis clean and dust-free.
- Install the device in a position far away from heat sources.
- Ensure that the cabinet and power distribution system are properly grounded.
- Do not place the device in walking areas.
- During the installation and maintenance, do not wear loose clothes, ornaments, or any other things that may be hooked by the chassis.
- Keep tools and components away from walking areas.

2.1.2 Handling Safety

- Prevent the device from being frequently handled.
- Cut off all the power supplies and unplug all power cords before moving or handling the device.
- Keep balance and prevent personal injuries when handling the device.

2.1.3 Electric Safety

Warning

- Improper or incorrect electric operations may cause a fire, electric shock, and other accidents, and lead to severe and fatal personal injury and device damage.
- Direct or indirect contact with high voltage or mains power supply through wet objects may cause fatal dangers.

- Observe local regulations and specifications during electric operations. Only personnel with relevant qualifications can perform such operations.
- Check whether there are potential risks in the work area. For example, check whether the power supply is grounded, whether the grounding is reliable, and whether the ground is wet.
- Learn about the position of the indoor emergency power switch before installation. Cut off the power switch in case of accidents.
- Check the device carefully before shutting down the power supply.

- If a power supply system is equipped with a leakage protector (also referred to as “leakage current switch” or “leakage current breaker”), the power supply will be cut off automatically when the electric leakage or electric shock occurs. The selected leakage protector should comply with the following rule:
  - The rated leakage action current of each leakage protector is greater than twice of the theoretical maximum leakage current of all the power supplies in the system.

    For example, if a system is equipped with 16 identical power supplies, the leakage current of each power supply is equal to or less than 3.5 mA, and the leakage current of the system totals 56 mA. A leakage protector with 30 mA rated action current supports less than five power supplies (that is, Action current of the leakage protector/2/Maximum leakage current of each power supply = 30/2/3.5 ≈ 4.28). In other words, the leakage protector with 30 mA rated action current supports no more than four power supplies. In this case, the 16 power supplies in the system require at least four leakage protectors with 30 mA rated action current and each leakage protector supports four power supplies. If power supplies in a system differ in models, the rated leakage action current of each leakage protector divided by two is greater than the sum of maximum leakage currents of all the power supplies.
  - The rated leakage non-action current of a leakage protector shall be 50% of the leakage action current. Otherwise, misoperation may easily occur due to high sensitivity and thus the leakage protector trips, devices are powered off, and services are interrupted.

    Take a leakage protector with 30 mA rated leakage action current as an example. The rated leakage non-action current shall be 15 mA. When the leakage current is below 15 mA, the protector shall not act.

Caution

- To guarantee personal safety, the rated leakage action current of each leakage protector in the system must be equal to or less than 30 mA (human body safety current is 30 mA). When twice of the total leakage current of the system is greater than 30 mA, the system must be equipped with two or more leakage protectors.
- For the leakage current value of each power supply model, see the power supply model specifications in Chapter 1.

2.1.4 Electrostatic Discharge Safety

- Properly ground the device and floor.
- Keep the indoor installation environment clean and free of dust.
- Maintain appropriate humidity conditions.

2.1.5 Battery

The RG-EG1510XS router support the button cell battery. Improper use of battery may cause damage. Therefore, pay attention to the following points:

- There is the potential risk of fire or explosion or device damage if the battery of an incorrect type is replaced. Replace the battery only with the same type.
- Disposal of a battery into fire or a hot oven, or mechanically crushing or cutting of a battery, can result in an explosion.
- The battery may experience an extremely high or low temperature or a low air pressure at a high altitude during use, storage or transportation.
- Leaving the battery in an extremely high temperature and/or low air pressure surrounding environment may result in an explosion or the leakage of flammable liquid or gas.

2.2 Installation Environment Requirements

Install the device indoors to ensure its normal operation and prolonged service life.

The installation site must meet the following requirements.

2.2.1 Bearing Requirements

Evaluate the weight of the device and its accessories (for example, the cabinet, chassis, and power supply modules), and ensure that the ground of the installation site meets the requirements.

If the RG-EG1510XS router is installed inside a cabinet, the following conditions must be met:

- Install the router into an open cabinet. If the router is installed into a closed cabinet, ensure that the cabinet has proper ventilation and heat dissipation.
- The cabinet is strong enough to support the weight of the router and its accessories.
- You are advised to install the device into a standard cabinet and maintain a proper clearance around the air vents for heat dissipation.
- The cabinet is properly grounded.

To install the device on a workbench, make sure that the workbench meets the following conditions:

- The size of the workbench is suitable and a proper clearance can be maintained around the air vents for heat dissipation.
- The workbench must be properly grounded.

2.2.2 Ventilation Requirements

Maintain a minimum clearance of 100 mm (3.94 in.) around the device for air circulation and normal heat dissipation. After various cables are connected, bundle the cables or place them in the cable management bracket to avoid blocking air inlets. Dust the device every three months to avoid blocking the ventilation openings.

2.2.3 Space Requirements

It is recommended that the width of the equipment room corridor be greater than 0.8m (31.50 in.) to ensure enough space for moving chassis.

Please do not install the device against the wall. Instead, please maintain a minimum clearance of 0.4 m (15.75 in.) around the device for heat dissipation and device maintenance.

2.2.4 Temperature/Humidity Requirements

To ensure the normal operation and prolonged service life of the device, maintain an appropriate temperature and humidity in the equipment room.

The equipment room with too high or too low temperature and humidity for a long period may damage the device.

- In an environment with high relative humidity, the insulating material may have poor insulation or even leak electricity.
- In an environment with low relative humidity, the insulating strip may dry and shrink, loosening screws.
- In a dry environment, static electricity is prone to occur and damage the internal circuits of the device.
- Too high temperatures can accelerate the aging of insulation materials, greatly reducing the reliability of the device and severely affecting its service life.

The temperature and humidity requirements of the device are as follows:

Table 2-1 Operating Environment Requirements

Operating Temperature	Operating Humidity
0ºC to 40ºC (32ºF to 104ºF)	10% to 90% RH (non-condensing)

Note

The ambient temperature and humidity of the device are measured at the point that is 1.5 m (59.06 in.) above the floor and 0.4 m (15.75 in.) before the device rack when there is no protective plate in front or at the back of the rack.

2.2.5 Cleanliness Requirements

Dust poses a major threat to the device. The indoor dust takes on a positive or negative static electric charge when falling on the device, causing poor contact of the metallic joint. Such electrostatic adhesion may occur more easily when the relative humidity is low, not only affecting the service life of the device, but also causing communication faults. The following table describes the requirements for the dust content and granularity in the equipment room.

Table 2-2 Requirements for Dust

Dust	Unit	Content
Dust particles (diameter ≥ 0.5 μm)	Particles/m^3	≤ 3.5×10^6
Dust particles (diameter ≥ 5 μm)	Particles/m^3	≤ 3×10^4

Apart from dust, the salt, acid, and sulfide in the air in the equipment room must meet strict requirements. These harmful substances will accelerate metal corrosion and component aging. Therefore, the equipment room should be properly protected against the intrusion of harmful gases, such as sulfur dioxide, hydrogen sulfide, nitrogen dioxide, and chlorine gas. The following table lists limit values for harmful gases.

Table 2-3 Requirements for Gases

Gas	Average (mg/m^3)	Maximum (mg/m^3)
Sulfur dioxide (SO_2)	0.3	1.0
Hydrogen sulfide (H_2S)	0.1	0.5
Nitrogen dioxide (NO_2)	0.5	1.0
Chlorine gas (Cl_2)	0.1	0.3

Note

Average refers to the average value of harmful gases measured in one week. **Maximum** refers to the upper limit of harmful gases measured in one week, and the maximum value lasts up to 30 minutes every day.

2.2.6 Grounding Requirements

A proper grounding system is the basis for stable and reliable running and is indispensable for preventing lightning strikes and interference. Carefully check the grounding conditions at the installation site according to the grounding specifications, and complete grounding properly based on the actual situation.

- Safe Grounding

Ensure that the cabinet and power distribution device are securely grounded when the device uses the AC power supply. Otherwise, electric shock may occur when the insulation resistance between the power supply inside the device and the chassis becomes small.

Caution

- Please adopt protection grounding connections in buildings so that the device can be connected to the protection ground.
- Check whether the AC socket is reliably connected to the protection ground of the building. If not, a protection ground wire should be used to connect the protection ground lug of the AC socket to the protection ground of the building.
- The cross-sectional area of the protection ground cable should be at least 0.75 mm^2 (18 AWG).

- Lightning Grounding

The lightning protection system of facilities is standalone, and is composed of a lightning rod, a lower conductor, and a connector connected to the grounding system. The grounding system is usually used for power reference grounding and safety grounding of the cabinet. Lightning grounding is required only for facilities and is not required for the device.

- EMC Grounding

Grounding required for electromagnetic compatibility includes shielded grounding, filter grounding, noise and interference suppression, and level reference, which contribute to the overall grounding requirements. The grounding resistance should be smaller than 1 ohm, and the ground terminals of the cabinet should be grounded before the running of the device.

2.2.7 Anti-interference Requirements

Various interference sources, from either outside or inside the equipment or application system, affect the device in the conductive ways such as capacitive coupling, inductive coupling, and electromagnetic radiation. There are two types of electromagnetic interferences: radiated interference and conducted interference, depending on the type of the propagation path. When the energy, often RF energy, from a component arrives at a sensitive component via the space, the energy is known as radiated interference. The interference source can be both a part of the interfered system and a completely electrically isolated unit. Conducted interference results from the electromagnetic wire or signal cable connection between the source and the sensitive component. The interference is conducted from one unit to another unit through cables.

Conducted interference often affects the power supply of the equipment, but can be controlled by a filter. Radiated interference may affect any signal path in the equipment, and is difficult to shield.

The anti-interference requirements are as follows:

- Take interference prevention measures for the power supply system.
- Keep the device away from the grounding equipment or lightning and grounding equipment of the power device as much as possible.
- Keep the device far away from high-frequency current devices such as high-power radio transmitting station and radar launcher.
- Take electromagnetic shielding measures when necessary.

2.2.8 Lightning Protection Requirements

- The device can guard against lightning strikes. As an electric device, it may still be damaged by strong lightning strikes. Take the following lightning protection measures: Ensure that the grounding cable of the cabinet is in good contact with the ground.
- Ensure that the neutral point of the AC power socket is in good contact with the ground.
- You are advised to install a power lightning arrester in front of the power input end to enhance the lightning prevention for the power supply.

2.2.9 Installation Site Requirements

Regardless of whether the device is installed into a cabinet or on a workbench, the following conditions must be met:

- Maintain a proper clearance around the air vents for heat dissipation.
- The cabinet or the workbench has proper ventilation and heat dissipation.
- The cabinet or the workbench is strong enough to support the weight of the device and its accessories.
- The cabinet or the workbench are properly grounded.

2.3 Cabinet Installation Requirements

If you want to install the device into a cabinet, confirm that the cabinet meets the following conditions:

(1) A standard 19-inch cabinet is used.

(2) The distance between square hole strips on the left and right sides of the standard 19-inch cabinet is 465 mm (18.31 in.).

Figure 2-1 Standard 19-inch Cabinet

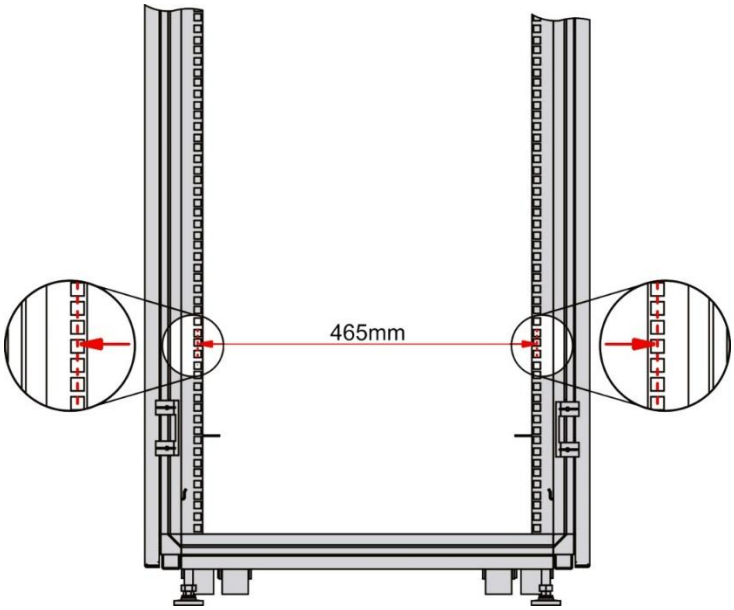

(3) The distance between the square hole strip on the rack column and the outer side of the front cabinet door is greater than 180 mm (7.09 in.) and the thickness of the front cabinet door is smaller than 25 mm (0.98 in.). Therefore, the available space is greater than 155 mm (6.10 in.). The cabinet depth (the distance between the front and rear doors) is greater than 1000 mm (39.37 in.).

(4) The slide rails (or trays) of the cabinet meets the requirements of the device and support its weight.

(5) A ground terminal is installed reliably on the cabinet to ensure that the device is fully grounded.

(6) The cabinet is well ventilated and the porosity of the front and rear panels is greater than 50%.

2.4 Notes for Connecting Optical Cables

Before connecting the optical cables, verify that the fiber connector type and fiber type match the optical port type. Attention should also be paid to the Rx and Tx ends of the optical cable. The Tx end of the local device must be connected to the Rx end of the peer device, and vice versa.

2.5 Tools

Table 2-4 Tools

Common Tools	Phillips screwdrivers, power cords, network cables, fastening bolts, diagonal pliers, and binding straps
Special Tools	Antistatic gloves, wire stripper, crimping pliers, crystal connector crimping pliers, and wire cutter
Meter	Multimeter
Relevant Devices	PC, display, and keyboard

Note

The device is delivered without a tool kit. Please prepare a tool kit yourself.

3 Installing the Router

Caution

Ensure that requirements in Chapter 2 are all met.

3.1 Installation Procedure

The installation steps are shown in the following figure.

Table 3-1 Installation Procedure

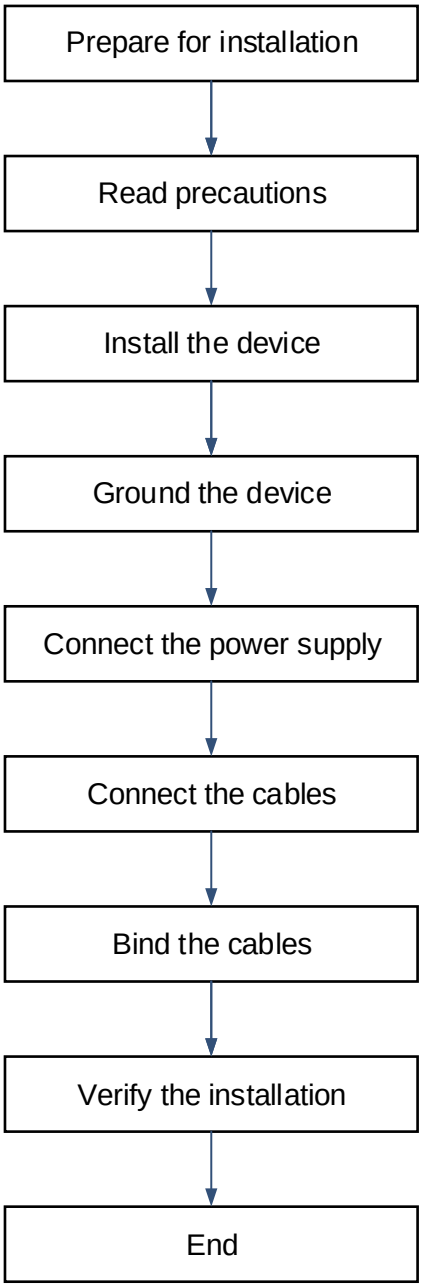

3.2 Before You Begin

Carefully plan and arrange the installation position, networking mode, power supply and cabling before installation. Confirm the following requirements before installation:

- The installation site provides sufficient space for heat dissipation.
- The installation site meets the temperature and humidity requirements of the device.
- The power supply and required current are available in the installation site.
- The network cables have been deployed in the installation site.
- The selected power supply modules meet the system power requirements.
- The position of the indoor emergency power switch is learned before installation. The power switch is cut off in case of accidents.

3.3 (Optional) Installing the Hard Disk Drive

If the router has a hard disk drive, install the hard disk drive as instructed in the following section.

Precautions

Pay attention to the following during the hard disk drive installation process:

- Install the hard disk drive only after the device is powered off to prevent any potential damage to the hard disk drive.
- Do not block the hole on top of the hard disk drive.
- Do not press down on the hard disk drive.
- Do not throw, jolt, vibrate, or shake the hard disk drive. Hold the hard disk drive by its side when handling it.
- Do not touch PCB components with bare hands or tools.

Procedure

(1) Power off the device, then unfasten the two screws on the back of the device to remove the blank panel.

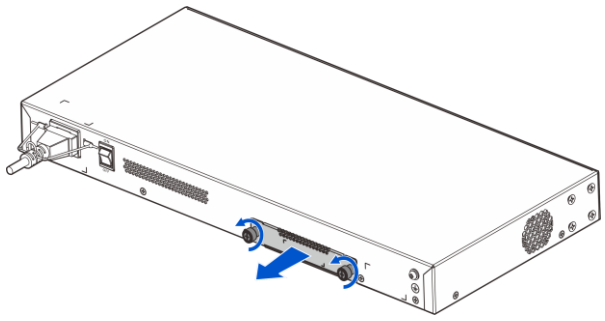

(2) Install the hard disk drive into the tray and insert the assembly back into the expansion slot.

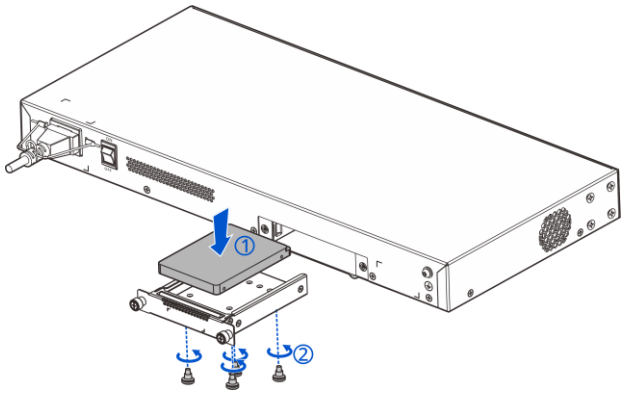

(3) Tighten the screws.

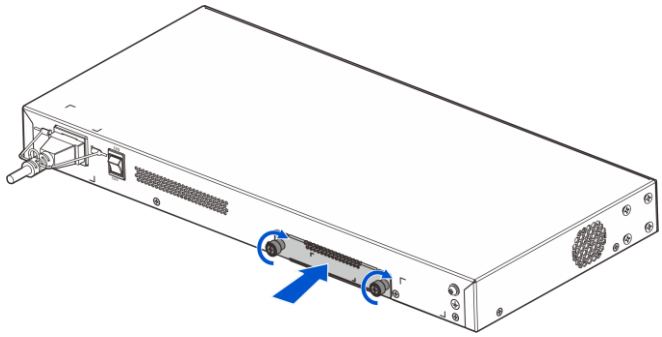

3.4 Precautions

To ensure the normal operation and prolonged service life of the device, please observe the following precautions:

- Do not power on the device during installation.
- Install the device in a well-ventilated position.
- Do not subject the device to high temperatures.
- Keep away from high voltage cables.
- Install the device indoors.
- Do not expose the device in a thunderstorm or strong electric field.
- Keep the device clean and dust-free.
- Cut off the power switch before cleaning the device.
- Do not wipe the device with a damp cloth.
- Do not wash the device with liquid.
- Do not open the enclosure when the device is working.
- Fasten the device tightly.
- Before powering off the router that contains a hard disk drive, be sure to switch off the power switch on the back panel of the router.

3.5 Installing the Device

3.5.1 Mounting the Device into a Cabinet

1. Precautions

If you want to install the RG-EG1510XS router into a cabinet, mount the cabinet first. When mounting the cabinet, please note the followings:

- All expansion bolts for fastening the cabinet base to the ground should be installed and tightened in sequence from bottom to up (large flat washer, spring washer, and nut), and the installation holes on the base and the expansion bolts are properly aligned.
- The installed cabinet should not be moved.
- The installed cabinet should be vertical to the ground.
- When multiple cabinets are placed side by side in the equipment room, they should be aligned with each other, leaving an error less than 5 mm (0.20 in.).
- The front/rear doors of the cabinet should be installed to allow you open and close them smoothly. The locks should work normally, and all keys should be complete.
- There should be no unnecessary and informal labels inside the cabinet and on service modules.
- Filler panels are installed on vacant slots.
- The screws in the cabinet should be fasten tightly and be of the same model.
- The device is securely installed, and the screws on the panel should be fastened tightly.
- All wiring outlets at the top and bottom of the cabinet should be installed with rodent-resistant nets with clearance of no more than 15 mm (0.59 in.) in diameter to prevent rodents and other small animals from entering the cabinet.
- Antistatic wrist straps should be provided in the cabinet.

2. Installation Preparations

(1) Plan the available space before installing the cabinet. Reserve enough space for the front and rear doors for device maintenance.

(2) Install and fasten the cabinet in the designed position as planned.

(3) Install the appropriate cable troughs and cables.

(4) Install the tray and cable management brackets on the rack according to the number of devices installed into the cabinet.

3. Installation Procedure

The RG-EG1510XS router can be installed in a 19-inch EIA cabinet. The installation steps are as follows:

(1) Remove the M4 x 8 mm Phillips countersunk head screws packaged with the cabinet mounting brackets, align one end of the mounting bracket against the side of the device, and securely fasten the mounting bracket using four M4 x 8 mm Phillips countersunk head screws. Follow the same procedure to install the other mounting bracket.

Figure 3-1 Securing the Mounting Brackets

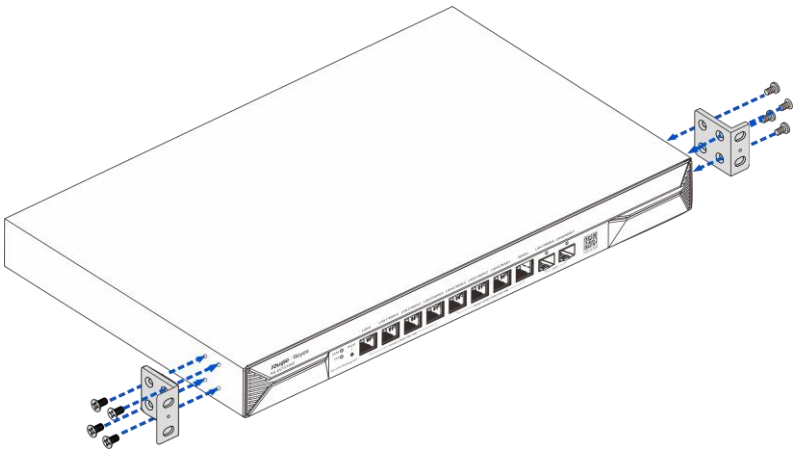

(2) Mount the device into the cabinet and secure the other end of the brackets to square hole posts of the cabinet using the cage nuts and M6 screws

3.5.2 Mounting the Device on a Workbench

If a standard 19-inch cabinet is unavailable, you can mount the device on a workbench.

(1) Attach the four foot pads to the four corners on the bottom of the device.

(2) Place the device on the workbench to ensure adequate airflow and good heat dissipation.

Caution

The workbench on which the device is mounted and operated must not be moved.

3.6 Connecting the Ground Cable of the Device

The router has a grounding lug for grounding protection. Connect the grounding lug of the device to the grounding terminal of the cabinet with a ground cable. Then connect the grounding terminal to the grounding bar in the equipment room.

Precautions:

- The cross-sectional area of the ground cable should be determined according to the possible maximum current. Cables with good conductor should be used.
- Do not use bare wires.
- The resistance between the chassis and ground should be less than 1 ohm.

Caution

The cross-sectional area of the protection ground cable should be at least 2.5 mm^2 (12 AWG).

3.7 Connecting the Power Cord

The power cord of the device has three cores. You are advised to use a single-phase three-core power socket or a multi-function power socket with a neutral point connector. The neutral point of the power supply must be

well grounded in the building. In general, the power supply neutral point of the building has been buried in the ground during the cabling. Users need to confirm whether the power supply of the building has been properly grounded.

Please connect the power cord based on the following steps:

(1) Insert the ring of the adapter DC connector into the DC input plug of the device. Plug the end of the power cord to the power socket on the adapter and the other end into the AC power socket. For those devices without the adapter power supply, plug the end of the power cord into the power socket on the rear panel of the device and the other end of the power cord into the AC power socket.

(2) Please check the status of system LED on the front panel of the device. If the LED is on, it means that the power cord is connected correctly. Otherwise, please check the power cord connection.

Caution

- Please use the power supply adapter and power cord delivered with the device to prevent accidents.
- The maintenance personnel should check whether the AC socket is reliably connected to the protection ground of the building. If not, the maintenance personnel should use a protection ground wire to connect the protection ground terminal of the AC socket to the protection ground of the building.
- During the device installation, connect the grounding cable first and disconnect it last.
- The power socket should be installed in an easily operable position near the device.

3.8 Connecting Cables

- Connect one end of the RJ45 connector for configuring Ethernet cables to the Ethernet interface of the device module and the other end to the NMS or a control client.
- Insert the twisted pair cable with RJ45 connector into the corresponding interface according to the panel identification, and distinguish the crossover cable and the straight-through cable.

3.9 Bundling Cables

3.9.1 Precautions

- The power cords and other cables/fibers should be bundled in a visually pleasing way.
- When you bundle he twisted pairs, make sure that the twisted pairs at the connectors have natural bends or bends of large radius.
- Do not bundle the twisted pairs too tightly, as this may press hard the cable/fibers and affect their service life and transmission performance.

3.9.2 Bundling Steps

(1) Bind the drooping part of the twisted pairs and lead them to both sides of the device for convenience.

(2) Fasten the twisted pairs to the cabinet cable management ring or bracket. Attach the cables in the cable tray of the rack.

(3) Bundle the twisted pairs closely along the bottom of the device and in a straight line wherever possible.

3.10 Verifying Installation

3.10.1 Verifying the Device

- Verify if the external power supply matches with the distribution panel of the cabinet.
- Verify if the front/back cabinet doors can be closed after the device is installed.
- Verify that the cabinet and all cables are securely fastened.
- Verify that the device has been installed in the cabinet.

3.10.2 Verifying Cable Connection

- Verify that the cable matches the interface type.
- Verify that cables are properly bundled.

3.10.3 Verifying Power Supply

- Verify that the power cord is properly connected and compliant with safety requirements.
- Verify that the device is operational after power-on.

4 Verifying Operating Status

4.1 Setting up Configuration Environment

- Wired Connection: Connect the LAN port of the router to the network port of the PC with an Ethernet cable. Configure the PC to get an IP address automatically.
- Wireless Connection: Connect the access point to the LAN port of the router with an Ethernet cable. The access point will automatically broadcast SSID “@Ruijie-mXXXX” (XXXX are the last four characters of the MAC address on the device label.) after power-on. Perform configuration on the device after the PC is connected to the wireless network.

Figure 4-1 Configuration Environment

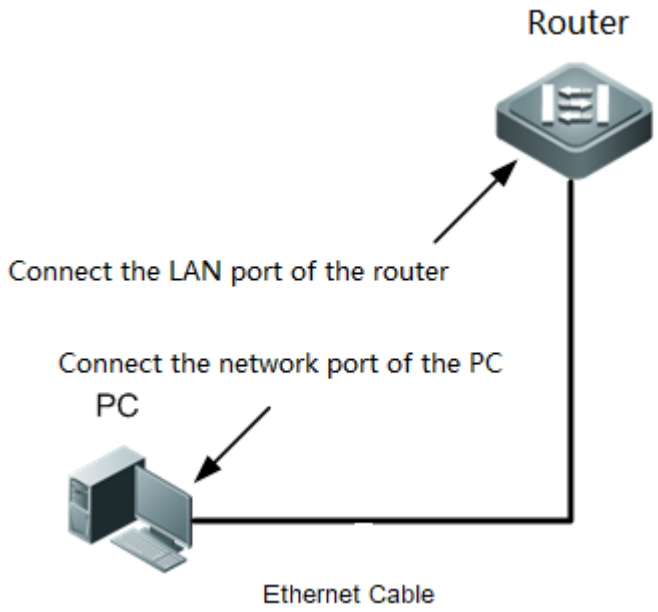

4.2 Checklist

4.2.1 Checklist before Power-on

- Check whether the device is properly grounded.
- Check whether the power cord is properly connected.
- Check whether the power supply voltage meets the requirement.
- Check whether the network cable is properly connected, whether the client (may be PC) is started, and whether configuration parameters are configured.

4.2.2 Checklist after Power-on

After the device is powered on, check whether the LEDs on the device are normal to ensure the normal configuration.

4.3 Log In to the Web Interface

(1) Start up the PC and configure the local connection attribute on the PC. Change the static IP address of the PC to 192.168.110.XXX (1–255, excluding 1).

Figure 4-2 Change the IP Address of the PC

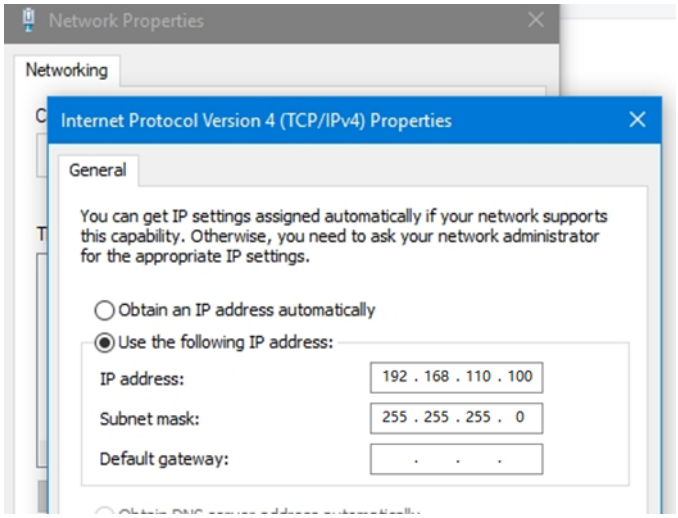

(2) Open a browser, enter 192.168.110.1 into the address bar of the browser, and press **Enter**.

Caution

Use the default password "admin" to log in to the switch for the first time. To ensure security, you are advised to change the password after login, and update the password regularly.

5 Troubleshooting

5.1 General Troubleshooting Procedure

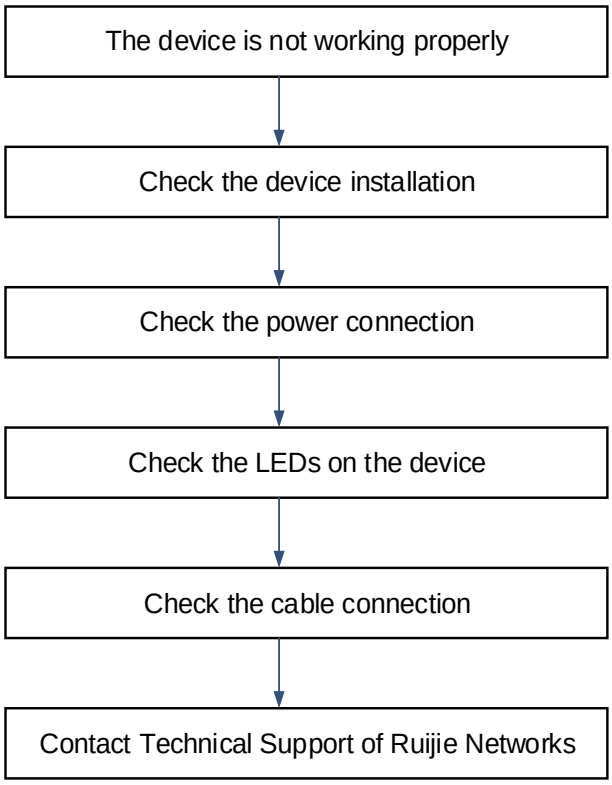

5.2 Common Troubleshooting Procedures

5.2.1 Password Loss

Press the **Reset** button for more than 5 seconds to restore the device to factory default settings and reset the system login password.

5.2.2 System LED Error

Cut off all power supplies first. Check if the cables of the cabinet have been correctly connected and the power socket is functional. Check whether the power cord is tightly connected to the cabinet power socket. Check whether the power cord is tightly connected and the adapter DC connector works properly.

6 Appendix

6.1 Connectors and Media

- **2500BASE-T/1000BASE-T/100BASE-TX/10BASE-T**

The 2500BASE-T/1000BASE-T/100BASE-TX/10BASE-T is a 10/100/1000/2500 Mbps adaptive port that supports auto MDI/MDIX Crossover.

Compliant with IEEE 802.3bz, 2500BASE-T requires Category 5e 100-ohm UTP or STP (STP is recommended) with a maximum distance of 100 meters (328 feet). 2500BASE-T requires all four pairs of wires be connected for data transmission, as shown in Figure 6-1.

Compliant with IEEE 802.3ab, 1000BASE-T requires Category 5e 100-ohm UTP or STP (STP is recommended) with a maximum distance of 100 meters (328 feet). 1000BASE-T requires all four pairs of wires be connected for data transmission, as shown in Figure 6-1.

Figure 6-1 2500BASE-T/1000BASE-T Connection

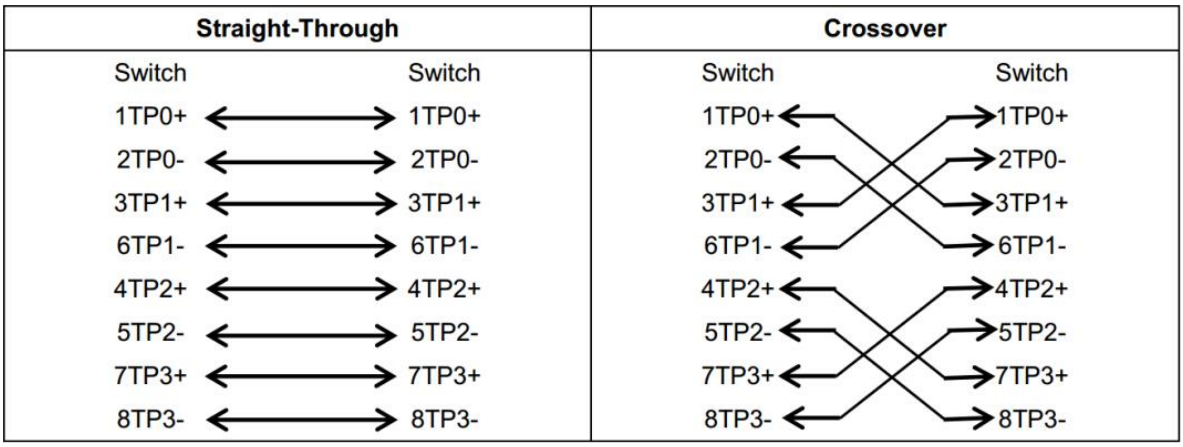

10BASE-T uses Category 3.4, 5, 5 100-ohm UTP/STP and 1000BASE-T uses Category 5 100-ohm UTP/STP for connections. Both support a maximum length of 100 meters. The following table shows 100BASE-TX/10BASE-T pin assignments.

Table 6-1 100BASE-TX/10BASE-T Pin Assignments

Pin	Socket	Plug
1	Input Receive Data+	Output Transmit Data+
2	Input Receive Data-	Output Transmit Data-
3	Output Transmit Data+	Input Receive Data+
6	Output Transmit Data-	Input Receive Data-
4,5,7,8	Not Used	Not Used

Figure 6-2 shows wiring of straight-through and crossover cables for 100BASE-TX/10BASE-T.

Figure 6-2 100BASE-TX/10BASE-T Connection

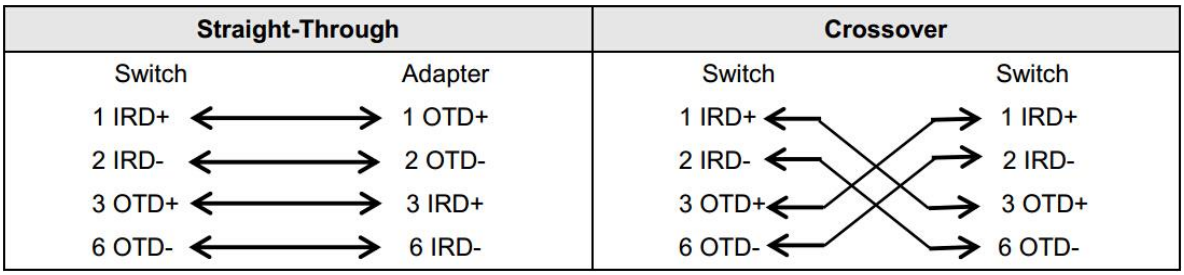

- Fiber-Optic Cable Connection

For the optical ports, select single-mode or multimode fiber-optic cables for connections according to the optical module connected. Figure 6-3 shows the connection schematic diagram.

Figure 6-3 Fiber-Optic Cable Connections

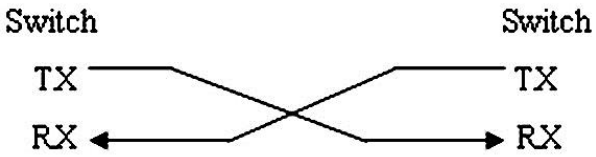

6.2 Mini-GBIC and 10GE SFP+ Module Specifications

SFP modules (mini-GBIC module) and 10GE SFP+ modules are available to cope with interface types of switch modules. You can select the mini-GBIC module to suit your specific needs. The models and technical specifications of some mini-GBIC and 10GE SFP+ modules are listed below. For details, see *Ruijie module Installation and Reference Guide.*

Table 6-2 Models and Technical Specifications of the 1GE Mini-GBIC (SFP) Module

Model	Wave Length (nm)	Media Type	DDM (Yes/No)	Intensity of Transmitted Light (dBm)		Intensity of Received Light (dBm)	
				Min	Max	Min	Max
MINI-GBIC-SX-MM850	850	MMF	No	-9.5	-3	-17	0
MINI-GBIC-LX-SM1310	1310	SMF	No	-9.5	-3	-20	-3
MINI-GBIC-LH40-SM1310	1310	SMF	Yes	-2	3	-22	-3
GE-SFP-LX20-SM1310-BIDI	1310TX/1550 RX	SMF	Yes	-9	-3	-20	-3

Model	Wave Length (nm)	Media Type	DDM (Yes/No)	Intensity of Transmitted Light (dBm)		Intensity of Received Light (dBm)	
				Min	Max	Min	Max
GE-SFP-LX20-SM1550-BIDI	1550TX/1310 RX	SMF	Yes	-9	-3	-20	-3
GE-SFP-LH40-SM1310-BIDI	1310TX/1550 RX	SMF	Yes	-5	0	-24	-1
GE-SFP-LH40-SM1550-BIDI	1550TX/1310 RX	SMF	Yes	-5	0	-24	-1
MINI-GBIC-ZX80-SM1550	1550	SMF	Yes	0	4.7	-22	-3
MINI-GBIC-ZX100-SM1550	1550	SMF	Yes	0	5	-30	-9
SFP-MM850	850	MMF	No	-9.5	-3	-17	0
SFP-SM1310	1310	SMF	No	-9.5	-3	-20	-3
GE-SFP-ZX	850	MMF	Yes	-9.5	-3	-17	0
GE-SX-MM850	850	MMF	Yes	-9.5	-3	-17	0
GE-LX-SM1310	1310	SMF	Yes	-9	-3	-20	-3
SFP-S4-R1000P1 v1	1310	SMF	Yes	0	5	-30	-9

Table 6-3 Models of 1GE SFP Copper Module

Standard	Model	DDM (Yes/No)
1000Base-T	Mini-GBIC-GT	No

Table 6-4 SFP Module Cabling Specification

SFP Model	Interface Type	Fiber Type	Core Size(μm)	Cabling Distance
MINI-GBIC-SX-MM850	LC	MMF	62.5/125	275 m
			50/125	550 m
MINI-GBIC-LX-SM1310	LC	SMF	9/125	10 km

SFP Model	Interface Type	Fiber Type	Core Size(μm)	Cabling Distance
MINI-GBIC-LH40-SM1310	LC	SMF	9/125	40 km
GE-SFP-SX-SM1310-BIDI	LC	MMF	50/125	500 m
GE-SFP-SX-SM1550-BIDI	LC	MMF	50/125	500 m
GE-SFP-LX20-SM1310-BIDI	LC	SMF	9/125	20 km
GE-SFP-LX20-SM1550-BIDI	LC	SMF	9/125	20 km
GE-SFP-LH40-SM1310-BIDI	LC	SMF	9/125	40 km
GE-SFP-LH40-SM1550-BIDI	LC	SMF	9/125	40 km
MINI-GBIC-ZX80-SM1550	LC	SMF	9/125	80 km
MINI-GBIC-ZX100-SM1550	LC	SMF	9/125	100 km
SFP-MM850	LC	MMF	50/125	500 m
SFP-SM1310	LC	SMF	9/125	10 km
GE-SFP-ZX	LC	MMF	50/125	550 m
GE-SX-MM850	LC	MMF	50/125	500 m
GE-LX-SM1310	LC	SMF	9/125	10 km
SFP-S4-R1000P1 v1	LC	SMF	9/125	10 km
Mini-GBIC-GT	RJ45	Category 5 (or above) UTP or STP		100 m
GE-SFP-GT	RJ45	Category 5 (or above) UTP or STP		100 m
SFP-GT	RJ45	Category 5 (or above) UTP or STP		100 m

Note

- For the optical module with the transmission distance exceeding 40 km (24.85 miles) or above, add one in-line optical attenuator on the link to avoid the overload of the optical receiver when short single-mode fiber-optic cables are used.
- Optical modules generate laser. Do not look directly into the optical module.
- To keep optical modules clean, use dust caps when the modules are not connected to fiber-optic cables.
- No extra cables are needed when SFP cables are used. To allow two ports to communicate easily, install the two ends of a SFP cable into corresponding ports.

Table 6-5 Specifications of SFP BIDI Optical Module Pairs

Rate/Distance	Module Pairs
1000 Mbps/500 m	GE-SFP-SX-SM1310-BIDI GE-SFP-SX-SM1550-BIDI
1000 Mbps/20 km	GE-SFP-LX20-SM1310-BIDI GE-SFP-LX20-SM1550-BIDI
1000 Mbps/40 km	GE-SFP-LH40-SM1310-BIDI GE-SFP-LH40-SM1550-BIDI
10GE/10 km	XG-SFP-LR-SM1270-BIDI XG-SFP-LR-SM1330-BIDI

Caution

The BIDI modules must be used in pairs, for example, FE-SFP-LX20-SM1310-BIDI and FE-SFP-LX20-SM1550-BIDI are used together.

Table 6-6 Models and Specifications of 10GE SFP+ Modules

Model	Wavelength (nm)	DDM (Yes/No)	Fiber Type	Transmit (dBm)		Receive (dBm)	
				MIN	MAX	MIN	MAX
XG-SFP-SR-MM850	850	Yes	MMF	-7.3	-1	-9.9	-1
XG-SR-MM850	850	Yes	MMF	-7.3	-1	-9.9	-1
SFP+MM850	850	Yes	MMF	-7.3	-1	-9.9	-1
XG-SFP-LR-SM1270-BIDI	1270	No	SMF	-6.5	0.5	-14.4	0.5
XG-SFP-LR-SM1330-BIDI	1330	No	SMF	-6.5	0.5	-14.4	0.5
XG-LR-SM1310	1310	Yes	SMF	-8.2	0.5	-14.4	0.5
SFP+SM1310	1310	Yes	SMF	-8.2	0.5	-14.4	0.5
XG-SFP-LR-SM1310	1310	Yes	SMF	-8.2	0.5	-14.4	0.5

Model	Wavelength (nm)	DDM (Yes/No)	Fiber Type	Transmit (dBm)		Receive (dBm)	
				MIN	MAX	MIN	MAX
XG-eSFP-LR-SM1310	1310	Yes	SMF	-8.2	0.5	-14.4	0.5
XG-SFP-ER-SM1550	1550	Yes	SMF	-4.7	4	-11.3	-1
XG-SFP-ZR-SM1550	1550	Yes	SMF	0	4	-24	-7
SFP-S4-R1000P1 v2	1310	Yes	SMF	-8.2	0.5	-14.4	0.5
SFP-S1-R1000P1	1310	Yes	SMF	-8.2	0.5	-14.4	0.5
SFP+1310	1310	Yes	SMF	-8.2	0.5	-14.4	0.5
SFP-M3-R1000P1	850	Yes	MMF	-7.3	-1	-11.1	-1
XG-LR-SM1310	1310	Yes	SMF	-8.2	0.5	-14.4	0.5
HSFP-XG-SFP-LR-SM1310	1310	Yes	SMF	-8.2	0.5	-14.4	0.5
XG-SFP-SR-MM850-I	850	Yes	MMF	-7.3	-1	-9.9	-1
XG-SFP-LR-SM1310-I	1310	Yes	SMF	-8.2	0.5	-14.4	0.5

Table 6-7 Models and Specifications of 10GE SFP+ AOC Modules

Model	Module Type	Connector	Length (m)	Conductor diameter(AWG)	Data Rate (Gbps)	Support DDM (Yes/No)
XG-SFP-AOC1M	Active	SFP+	1	\	10.3125	Yes
XG-SFP-AOC3M	Active	SFP+	3	\	10.3125	Yes

Model	Module Type	Connector	Length (m)	Conductor diameter(AWG)	Data Rate (Gbps)	Support DDM (Yes/No)
XG-SFP-AOC5M	Active	SFP+	5	\	10.3125	Yes
XG-SFP-AOC10M	Active	SFP+	10	\	10.3125	Yes

Note

The types/models of the SFP+ modules are being updated. If more accurate models of the module are required, contact Ruijie marketing staff or technical support engineers.

The TX power of AOC cable can be displayed as “N/A”.

Table 6-8 10GE SFP+ Module Cabling Specification

Model	Interface Type	Fiber Type	Core Size(μm)	Modal Bandwidth (MHz.km)	Cabling Distance
XG-SFP-SR-MM850	LC	MMF	50/125	2000(OM3)	300 m
XG-SR-MM850	LC	MMF	50/125	2000(OM3)	300 m
SFP+MM850	LC	MMF	50/125	2000(OM3)	300 m
XG-SFP-LR-SM1270-BIDI	LC	SMF	9/125	N/A	10 km
XG-SFP-LR-SM1330-BIDI	LC	SMF	9/125	N/A	10 km
XG-SFP-LR-SM1310	LC	SMF	9/125	N/A	10 km
SFP+SM1310	LC	SMF	9/125	N/A	10 km
XG-SFP-ER-SM1550	LC	SMF	9/125	N/A	40 km
XG-SFP-ZR-SM1550	LC	SMF	9/125	N/A	80 km
SFP-S4-R1000P1 v2	LC	SMF	9/125	N/A	10 km
SFP-S1-R1000P1	LC	SMF	9/125	N/A	10 km
SFP+1310	LC	SMF	9/125	N/A	10 km
SFP-M3-R1000P1	LC	MMF	50/125	2000(OM3)	300 m
XG-LR-SM1310	LC	SMF	9/125	N/A	10 km
HSFP-XG-SFP-LR-SM1310	LC	SMF	9/125	N/A	10 km

Model	Interface Type	Fiber Type	Core Size(μm)	Modal Bandwidth (MHz.km)	Cabling Distance
XG-SFP-SR-MM850-I	LC	MMF	50/125	2000(OM3)	300 m
XG-SFP-LR-SM1310-I	LC	SMF	9/125	N/A	10 km

6.3 Cabling Recommendations

When RG-EG1510XS router is installed in standard 19-inch cabinets, cables are tied in the binding rack on the cabinet by the cabling rack, and top or bottom cabling is adopted according to the actual situation in the equipment room. All cable connectors should be placed at the bottom of the cabinet in an orderly manner but not outside the cabinet. Power cables are routed beside the cabinet, and top or bottom cabling is adopted according to the actual situation in the equipment room, such as the position of the DC power distribution box, AC socket, or lightning protection box.

Requirements for the Minimum Cable Bending Radius

- The bending radius of a power cord, communication cable, and flat cable should be five times greater than their respective diameters. The bending radius of these cables that often bend or is removed or installed should be seven times greater than their respective diameters.
- The bending radius of a common coaxial cable should be seven times greater than its diameter. The bending radius of this type of cables that often bend or is removed or installed should be 10 times greater than its diameter.
- The bending radius of a high-speed cable (for example, SFP cable) should be five times greater than its diameter. The bending radius of this type of cables that often bend or is removed or installed should be 10 times greater than its diameter.

Requirements for the Minimum Fiber Bending Radius

- The diameter of a fiber tray to hold fibers cannot be 25 times less than the diameter of the fiber.
- When moving an optical fiber, the bending radius of the fiber should be equal to or 20 times greater than the diameter of the fiber.
- During cabling of an optical fiber, the bending radius of the fiber should be equal to or 10 times greater than the diameter of the fiber.

Precautions for Bundling Up Cables

- Before bundling up cables, correctly mark labels and stick the labels to cables.
- Cables should be neatly and properly bundled, as shown in Figure 6-4.

Figure 6-4 Bundling Cables (1)

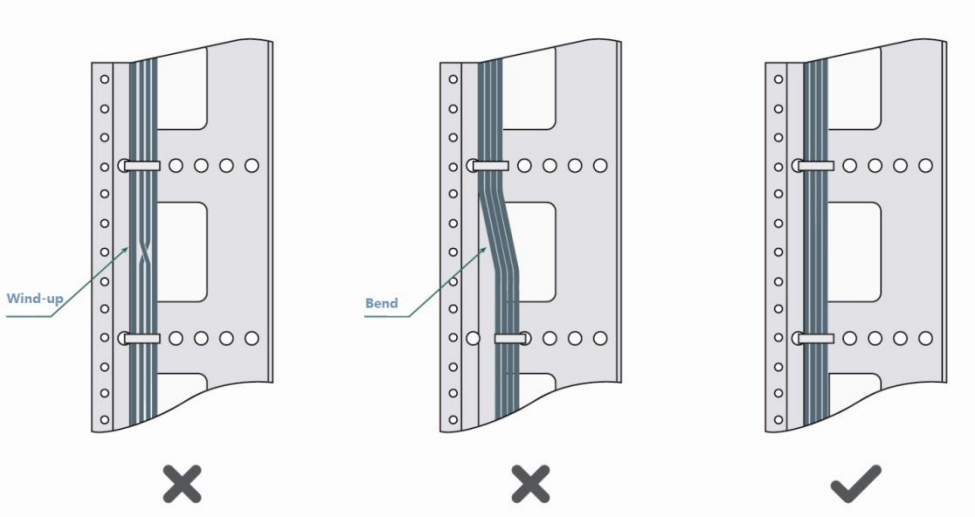

- Cables of different types (such as power cords, signal cables, and ground cables) should be separated in cabling and bundling. When they are close, crossover cabling can be adopted. In the case of parallel cabling, maintain a space of at least 30 mm (1.18 in.) for power cords and signal cables.
- The binding rack and cabling slot inside and outside the cabinet should be smooth, without sharp corners.
- The metal hole traversed by cables should have a smooth and fully rounding surface or an insulated lining.
- Proper buckles should be selected to bundle up cables. It is forbidden to connect two or more buckles to bundle up cables.
- After bundling up cables with buckles, you should cut off the remaining part. The cut should be smooth and trim, without sharp corners, as shown in Figure 6-5.

Figure 6-5 Bundling Cables (2)

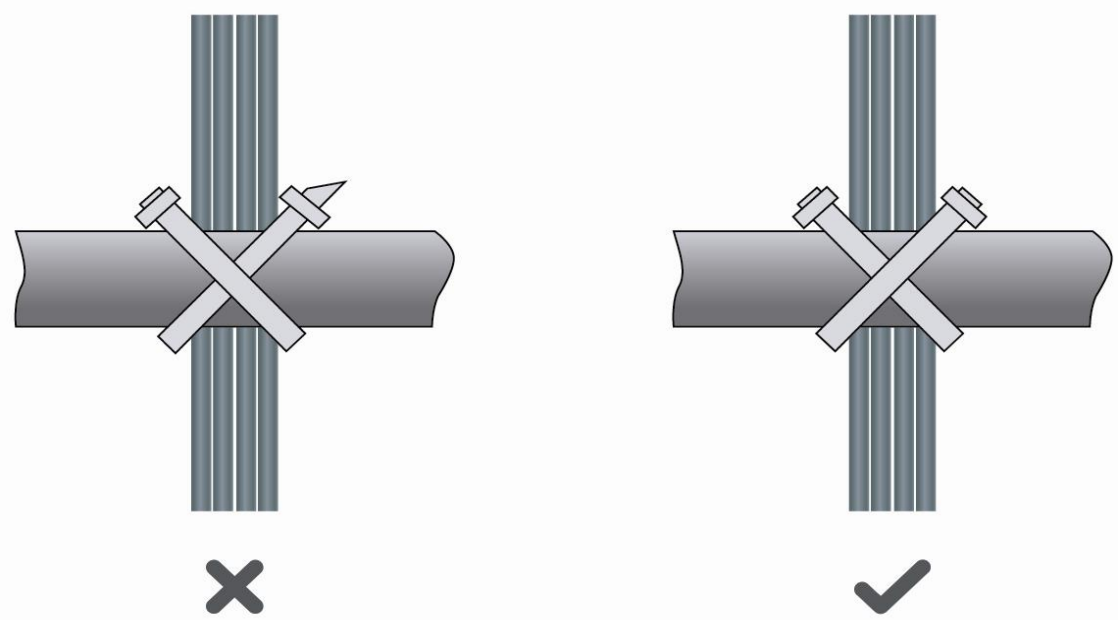

- When cables need to bend, first bundle them up. However, the buckle cannot be bundled within the bending area. Otherwise, significant stress may be generated in cables, breaking cable cores.

Figure 6-6 Bundling Cables (3)

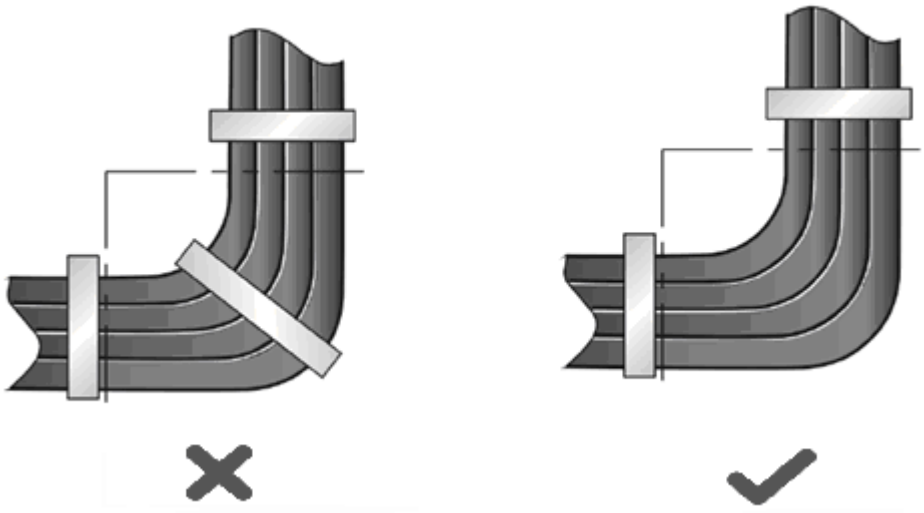

- Cables not to be assembled or remaining parts of cables should be folded and placed in a proper position of the cabinet or cabling slot. The proper position will not affect device running or cause device or cable damage during commissioning.
- Power cords cannot be bundled on guide rails of moving parts.
- Power cables connecting moving parts such as door grounding wires should be reserved for access after being assembled. When the moving part reaches the installation position, the remaining part should not touch heat sources, sharp corners, or sharp edges. If heat sources cannot be avoided, high-temperature cables should be used.
- When using screw threads to fasten cable terminals, the bolt or screw must be tightly fastened, and anti-loosening measures should be taken, as shown in Figure 6-7.

Figure 6-7 Cable Fastening

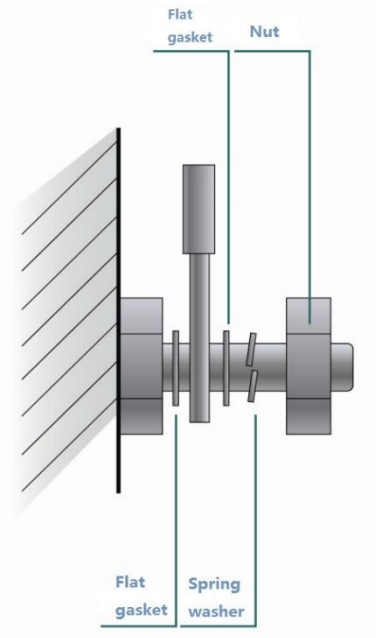

- The hard power cable should be fastened by the terminal connection area to prevent stress.

- Do not use self-tapping screws to fasten terminals.
- Power cables of the same type in the same cabling direction should be bundled up into cable bunches, with clean and straight cables in cable bunches.
- Binding by using buckles should be performed according to Table 6-9.

Table 6-9 Cable Bunch

Cable Bunch Diameter (mm)	Binding Space (mm)
10	80 to 150
10 to 30	150 to 200
30	200 to 300

- No knot is allowed in cabling or bundling.
- For solder-less terminal blocks (such as air switches) of the cold pressing terminal type, the metal part of the cold pressing terminal should not be exposed outside the terminal block during assembly.