Tiandy

TC-H342N 9DA-4

PT Camera

Wi-Fi Series

KEY FEATURES

- Plastic housing
- Up to 4MP,2560×1440@20fps
- S+265/H.265/H.264B/H.264M/H.264H
- Color:0.02Lux@(F1.6,AGC ON),B/W:0Lux with IR
- IR range up to 15m
- 1×Built-in Mic, 1×Built-in Loudspeaker
- Support microSD/microSDHC/microSDXC card,up to 256GB
- Operating conditions -10°C-45°C(14°F~113°F), ≤95%RH
- DC5V±5% USB type-C,Max.7.5W

Tiandy Technologies Co.,Ltd Tiandy Overseas Tiandy @tiandyofficial

Tiandy Technologies Co.,Ltd.
Email: sales@tiandy.com Tel: +86-22-58596065
Website: en.tiandy.com Fax: +86-22-58596048

2025.12.02

Tiandy

SPECIFICATIONS

Camera	
Image Sensor	1/2.8"CMOS
Min. Illumination	Color:0.02Lux@(F1.6,AGC ON),B/W:0Lux with IR
Shutter Time	1s~1/100000s
Day&Night	IR-cut filter with auto switch (ICR)
Smart IR	Yes
WDR	DWDR
S/N	>38dB
Angle Adjustment	0-350°; -25-90°
Lens	
Lens Type	Fixed focal lens
Focal Length	4mm
Lens Mount	M12
Aperture Range	F1.6
Aperture Type	Fixed
Field of View	78.9°(H); 41°(V); 92.9°(D)
DORI Distance	Detect:80m Observe:31.75m Recognize:16m Identify:8m
Pan&Tilt	
Pan Speed	45°/s
Tilt Speed	30°/s
Preset	255
Illuminator	
IR LEDs	4
IR Distance	Up to 15m
Wavelength	850nm
White LEDs	1
Whitelight Distance	10m
Compression Standard	
Video Compression	S+265/H.265/H.264B/H.264M/H.264H
Video Bit Rate	32k~4Mbps
Audio Compression	G.711A/G.711U
Audio Sampling Rate	8kHz/16kHz
Image	
Max. Resolution	4MP,2560×1440@20fps

Tiandy

Main Stream	PAL: 20fps(2560×1440, 2304×1296, 1920×1080, 1280×720, 704×576) NTSC: 20fps(2560×1440, 2304×1296, 1920×1080, 1280×720, 704×480)
Sub Stream	PAL:20fps(704×576, 704×288, 352×288, 640×360) NTSC:20fps(704×480, 704×240, 352×240, 640×360)
BLC	Yes
HLC	Yes
AGC	Yes
3D DNR	Yes
White Balance	Auto/Semi-Auto/Manual/Sunshine/Nature Light/Warmlight Lamp/Daylight Lamp/Filament Lamp/Lock White Balance
OSD	Overlay of additional characters in 1 regions, 1 line, with a maximum of 48 characters or 16 Chinese characters per region; 16*16/32*32/48*48/64*64; Lattice
Privacy Mask	4 black static areas
Defog	Yes
Feature	
Exceptions Alarm	Disk Full; Disk R/W Error; IP Address Conflict; MAC Address Conflict
Linkage Method	Trigger Sound; Trigger Warmlight; Trigger Recording; Trigger Capture
Video Analytics	Smart Alarm
Auto-Tracking	Yes
Network	
Protocols	RTSP; HTTP; TCP; UDP; ICMP; DHCP; DNS; NTP; IPv4; SSH; Unicast; FTP
System Compatibility	ONVIF(Profile S/T) ; SDK; CGI; Milestone
Remote Connection	≤2
Client	Easy7 VMS
Mobile Client	EasyLive Plus
Web	IE10+; Firefox52+; Edge89+; Safari11+; Chrome57+
Wi-Fi	
Transmission Distance	Up tp 30m(based on actual environment)
Wireless Standard	IEEE802.11b/ 802.11g/802.11n
Frequency Range	2.4 GHz ~ 2.4835 GHz
Channel Bandwidth	20/40MHz
Wi-Fi Security	WPA-PSK/WPA2-PSK
Interface	
Communication Interface	1×RJ-45 (10/100 Base-T)
Built-in Mic	1×Built-in Mic
Built-in Speaker	1×Built-in Loudspeaker
Reset Button	Yes
On-board Storage	Support microSD/microSDHC/microSDXC card,up to 256GB

Tiandy

General	
Web Client Language	3languages Simple Chinese/English/Tiếng Việt
Operating Temperature	-10°C-45°C(14°F~113°F)
Operating Humidity	≤95%RH
Storage Temperature	-10°C-45°C(14°F~113°F)
Storage Humidity	10%~95%RH(non-condensing)
Power Supply	DC5V±5% USB type-C,Max.7.5W
Protection	Surge500V; ESD6000V
Boundary Dimensions	80(L)80(W)113(H)mm
Package Dimensions	97(L)97(W)165(H)mm
GrossWeight	0.36kg
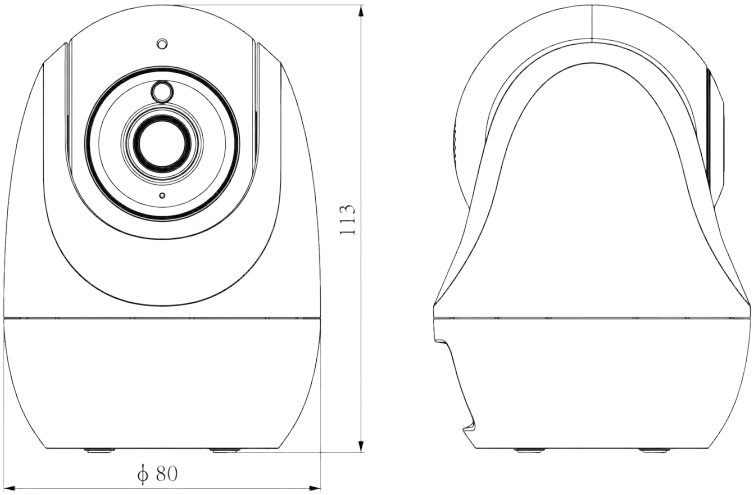
DIMENSIONS (Unit: mm)