Tiandy

TC-C344S 2ETA-28

4MP Fixed Color Maker Bullet Camera

SK Series

KEY FEATURES

- Metal+plastic housing
- Up to 4MP,2560×1440@30fps
- S+265/H.265/H.264B/H.264M/H.264H
- Color:0.002Lux@(F1.6,AGC ON),B/W:0Lux with IR
- IR range up to 30m
- 1×Built-in Mic
- Support microSD/microSDHC/microSDXC card,up to 512GB
- Operating conditions -30°C~60°C(-22°F~140°F), ≤95%RH
- DC12V±25%,Max. 6W, PoE:IEEE 802.3af,Max. 6.5W
- IP67

Tiandy Technologies Co.,Ltd Tiandy Overseas Tiandy @tiandyofficial

Tiandy Technologies Co.,Ltd.
Email: sales@tiandy.com Tel: +86-22-58596065
Website: en.tiandy.com Fax: +86-22-58596048

2025.10.17

Tiandy

SPECIFICATIONS

Camera	
Image Sensor	1/3"CMOS
Min. Illumination	Color:0.002Lux@(F1.6,AGC ON),B/W:0Lux with IR
Shutter Time	1s~1/100000s
Day&Night	IR-cut filter with auto switch (ICR)
Smart IR	Yes
WDR	TWDR
S/N	>42dB
Angle Adjustment	0~360°(P); 0~90°(T); 0~360°(R)
Lens	
Lens Type	Fixed focal lens
Focal Length	2.8mm
Lens Mount	M12
Aperture Range	F1.6
Aperture Type	Fixed
Field of View	100.3°(H); 54.5°(V); 116.1°(D)
DORI Distance	Detect:56.00m Observe:22.22m Recognize:11.20m Identify:5.60m
Illuminator	
IR LEDs	2
IR Distance	Up to 30m
Wavelength	850nm
White LEDs	2
Whitelight Distance	15m
Compression Standard	
Video Compression	S+265/H.265/H.264B/H.264M/H.264H
Video Bit Rate	32k~6Mbps
Audio Compression	G.711A/G.711U/ADPCM_D
Audio Sampling Rate	8kHz/32kHz/48kHz
Image	
Max. Resolution	4MP,2560×1440@30fps
Main Stream	PAL:25fps(2560×1440,2304×1296,1920×1080,1280×720) NTSC:30fps(2560×1440,2304×1296,1920×1080, 1280×720)
Sub Stream	PAL:25fps(704×576, 704×288, 640×360, 352×288) NTSC:30fps(704×480, 704×240, 640×360, 352×240)
BLC	Yes

Tiandy

HLC	Yes
AGC	Yes
3D DNR	Yes
White Balance	Auto/Semi-Auto/Manual/Sunshine/Nature Light/Warmlight Lamp/Daylight Lamp/Filament Lamp/Lock White Balance
ROI	8 rectangular static areas
OSD	Overlay of additional characters in 1 regions, 1 line, with a maximum of 48 characters or 16 Chinese characters per region; 16*16/32*32/48*48/64*64; Lattice
Privacy Mask	4 black static areas
Defog	Yes
Feature	
General Alarm	Smart Alarm(human and vehicle detection)
Exceptions Alarm	Disk Full; Disk R/W Error; IP Address Conflict; Network Disconnection
Linkage Method	Trigger Recording; Trigger Capture; Notify Surveillance Center
Network	
ANR	Yes
Protocols	RTSP; HTTP; TCP; UDP; UPnP; ICMP; SNMP; DHCP; DNS; DDNS; Easy DDNS; NTP; TLS v1.2; QoS; IPv4; SSH; Unicast; ARP; FTP
System Compatibility	P2P(Mutually exclusive with Profile G); ONVIF(Profile S/T/G) ; SDK; CGI; Milestone
Remote Connection	≤2
Client	Easy7 VMS
Web	IE10+; Firefox52+; Edge89+; Safari11+; Chrome57+
Interface	
Communication Interface	1×RJ-45 (10/100 Base-T)
Built-in Mic	1×Built-in Mic
Reset Button	Yes
On-board Storage	Support microSD/microSDHC/microSDXC card,up to 512GB
General	
Web Client Language	20 languages Simple Chinese/Traditional Chinese/English/Spanish/Korean/Italian/Turkish/Russian/Thai/French/Polish/Dutch/Hebrew/Arabic/Vietnamese/German/Ukrainian/Portuguese/Albanian/Greek
Operating Temperature	-30°C~60°C(-22°F~140°F)
Operating Humidity	≤95%RH
Storage Temperature	-30°C~60°C(-22°F~140°F)
Storage Humidity	10%~95%RH(non-condensing)
Power Supply	DC12V±25%,Max. 6W; PoE:IEEE 802.3af,Max. 6.5W
Protection	Surge4000V; ESD6000V; IP67
Boundary Dimensions	165(L)73(W)70(H)mm

Tiandy

DIMENSIONS (Unit: mm)

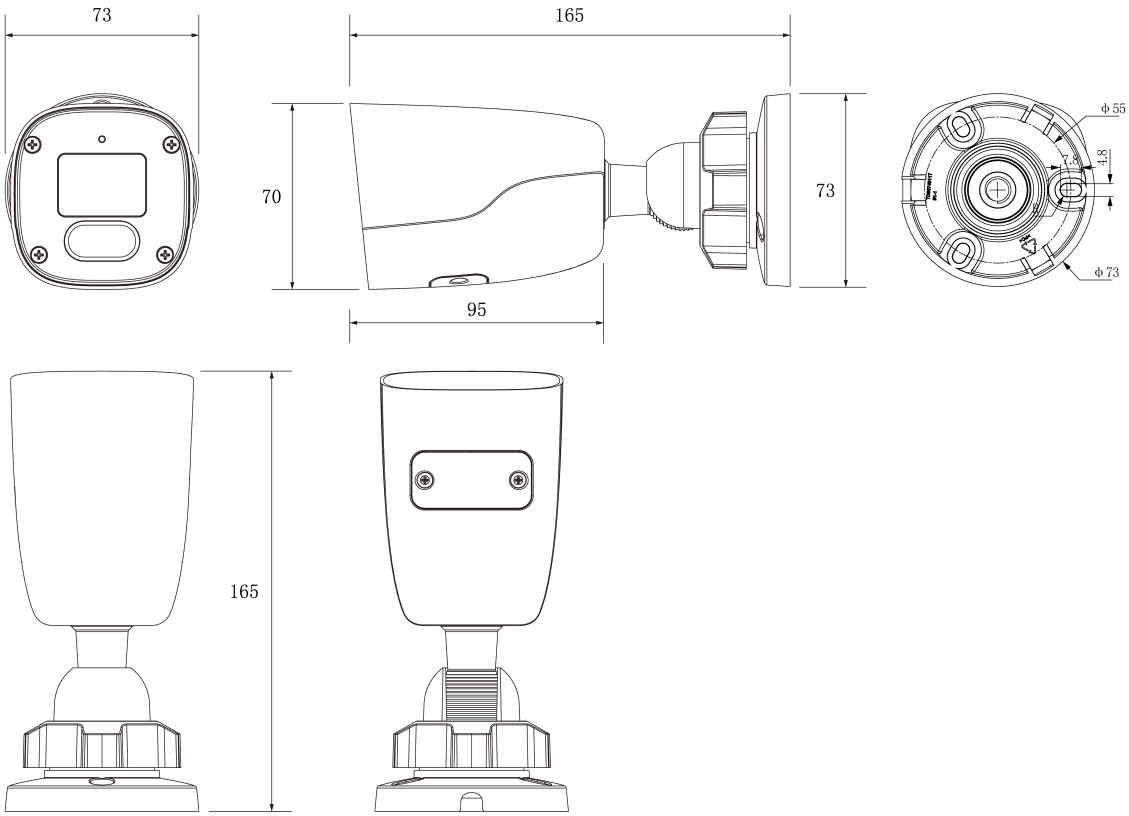

Tiandy

Assembly diagram of Junction Box

A35
CORNER MOUNT

TC-P54BM SPEC: V5
JUNCTION BOX

A36
POLE MOUNT