Tiandy

TC-H363U 9DA-4

PT Camera

4G Series

KEY FEATURES

- Plastic housing
- Up to Panorama:3MP,2304×1296@20fps Detail:3MP, 2304×1296@20fps
- S+265/H.265
- Color:0.0004Lux@(F1.0,AGC ON),B/W:0Lux with IR
- IR range up to 30m
- 1×Built-in Mic, 1×Built-in Loudspeaker
- Support microSD/microSDHC/microSDXC card,up to 256GB
- Operating conditions -20°C~50°C(14°F~122°F) (Charge:-20°C~50°C), ≤95%RH
- DC5V±25%,Max. 10W
- IP65

Tiandy Technologies Co.,Ltd Tiandy Overseas Tiandy @tiandyofficial

Tiandy Technologies Co.,Ltd.
Email: sales@tiandy.com Tel: +86-22-58596065
Website: en.tiandy.com Fax: +86-22-58596048

2025.12.02

Tiandy

SPECIFICATIONS

Camera	
Image Sensor	Panorama: 1/2.9"CMOS Detail: 1/2.9"CMOS
Min. Illumination	Color:0.0004Lux@(F1.0,AGC ON),B/W:0Lux with IR
Shutter Time	1s-1/100000s
Day&Night	Fixed IR-cut
WDR	DWDR
S/N	⩾52dB
Angle Adjustment	Panorama:-60~60°(P) Details:0~345°(P); Panorama:5~15° Details:0~90°
Lens	
Lens Type	Fixed focal lens
Focal Length	Panorama: 4mm Detail: 4mm
Lens Mount	M12
Aperture Range	Panorama: F1.0 Detail: F1.0
Aperture Type	Fixed
Field of View	Panorama:79.8°(H); Detail:79.8°(H); Panorama:44.7°(V); Detail:44.7°(V); Panorama:90.8°(D); Detail:90.8°(D)
DORI Distance	Panorama: Detect: 57.14 m Observe: 22.68 m Recognize: 11.43 m Identify: 5.71 m Detail: Detect: 57.14 m Observe: 22.68 m Recognize: 11.43 m Identify: 5.71 m
Pan&Tilt	
Pan Speed	30°/s
Tilt Speed	25°/s
Preset	64
Illuminator	
IR LEDs	Panorama:4 Detail:4
IR Distance	Up to 30m

Tiandy

Wavelength	850nm
White LEDs	Panorama:4 Detail:4
Whitelight Distance	20m
Red and Blue Alarm Flash	Yes
Compression Standard	
Video Compression	S+265/H.265
Video Bit Rate	1.2Mbps
Audio Compression	G.711A
Audio Sampling Rate	16kHz
Image	
Max. Resolution	Panorama:3MP,2304×1296@20fps Detail:3MP,2304×1296@20fps
Main Stream	Panorama: PAL:20fps(2304×1296) Detail: PAL:20fps(2304×1296)
Sub Stream	PAL:15fps(704×576)
AGC	Yes
3D DNR	Yes
White Balance	Auto
OSD	48*48; Lattice
Feature	
General Alarm	Smart Alarm(human and vehicle detection)
Exceptions Alarm	Disk Full; Disk R/W Error
Linkage Method	Trigger Sound; Trigger Warmlight; Trigger Recording; Trigger Capture
Auto-Tracking	Auto-Tracking
Network	
Protocols	TCP/IP; UDP; ICMP; DNS; NTP; IPv4; SSH; Unicast
Remote Connection	≤2
Client	Easy7 VMS
Mobile Client	EasyLive Plus
Interface	
Built-in Mic	1×Built-in Mic
Built-in Speaker	1×Built-in Loudspeaker
Reset Button	Yes
On-board Storage	Support microSD/microSDHC/microSDXC card,up to 256GB
General	
Operating Temperature	-20°C~50°C(14°F~122°F) (Charge:-20°C~50°C)

Tiandy

Operating Humidity	≤95%RH
Storage Temperature	-20°C~50°C(14°F~122°F)
Storage Humidity	10%~95%RH(non-condensing)
Power Supply	DC5V±25%,Max. 10W
Protection	Surge500V; ESD6000V; IP65
Boundary Dimensions	183(L)105(W)202(H)mm
Package Dimensions	315(L)225(W)180(H)mm
GrossWeight	1.66kg
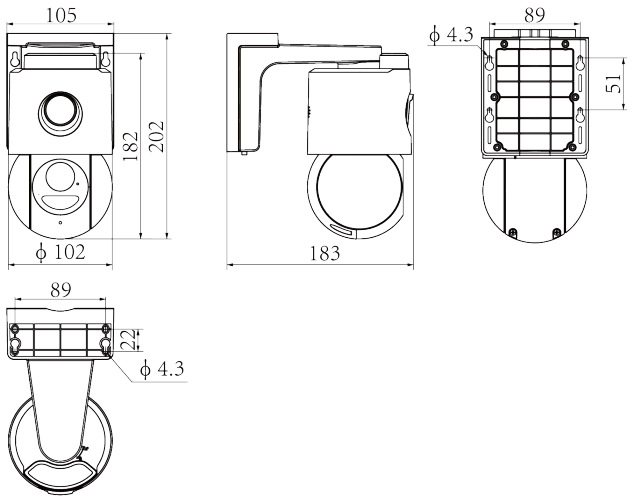
DIMENSIONS (Unit: mm)