DH-HAC-HFW1200RM-A

2MP IR HDCVI Fixed-focal Bullet Camera



* The parameters and datasheets below can only be applied to 1200-S6 series.

- Max. 30 fps@1080p
- Smart IR Illumination
- 30 m illumination distance
- Super Adapt
- Built-in Mic
- 3.6 mm fixed lens (2.8 mm optional)
- CVI/CVBS/AHD/TVI switchable
- IP67, 12 VDC



Series Overview

The Lite Series is a great choice for consumers looking for high quality monitoring products at a reasonable price. Its low cost and high performance make it ideal for residential areas and SMB solutions. This series is equipped with a wide range of technologies, such as full-color and starlight, providing various solutions for different scenarios.

Functions

Built-in Mic

Audio signal transmission over coaxial cables is supported by the HDCVI camera. It adopts a unique audio processing and transmission technology that restores source audio and eliminates noise, ensuring the quality and reliability of the audio information that is collected. This becomes important for video surveillance applications that use audio information as a type of supplementary evidence.

Smart IR Illumination

With its IR illumination, the camera provides optimal performance in low light conditions, ensuring uniformity in the brightness of B/W images. Through its smart IR technology, the camera also compensates for the distance of targets by adjusting the intensity of its IR LEDs, preventing overexposure of images as targets move closer to the camera.

Super Adapt

With its intelligent algorithm, the camera automatically adjusts its parameters to provide optimal performance and vivid images.

Advanced 3DNR

Dahua's advanced 3DNR technology reduces image noise with little to no impact on image sharpness, especially in poor lighting conditions. It detects the noise, and compares the sequential frames to effectively reduce the noise. It also makes efficient use of bandwidth, saving on storage space.

Protection (IP67, Wide Voltage)

IP67: The camera passed a series of rigorous dust and immersion tests. Its enclosure is both dust-proof and waterproof, and can function normally while being immersed in 1 m deep water for up to 30 minutes.

Wide voltage: The camera has ±30% input voltage tolerance (for some power supplies) and a wide voltage range, making it suitable for a variety of outdoor scenarios.

4 Signals over 1 Coaxial Cable

HDCVI technology supports 4 signals (video, audio*, data and power) which are simultaneously transmitted over a coaxial cable. Dual-way data transmission allows the HDCVI camera to interact with the XVR to perform various actions such as sending control signals and triggering alarms. HDCVI technology also supports PoC, which makes the camera easy and quick to install.

* Audio input is available for select HDCVI camera models.

Long Distance Transmission

HDCVI technology provides long distance transmission in real time without transmission loss. It supports transmission distances up to 700 m for 2-MP/5-MP/8-MP HD videos through coaxial cables, and up to 300 m through UTP cables. The results were obtained and verified through rigorous testing in Dahua's test laboratory.

Technical Specification

Camera

Image Sensor	2 MP CMOS
Max. Resolution	1920 (H) × 1080 (V)
Scanning System	Progressive
Electronic Shutter Speed	PAL: 1/25 s–1/100,000 s NTSC: 1/30 s–1/100,000 s
Min. Illumination	0.01 lux@F2.0 (Color, 30 IRE) 0.001 lux@F2.0 (B/W, 30 IRE) 0 lux (Illuminator on)
S/N Ratio	>65 dB
Illumination Distance	30 m (98.43 ft)
Illuminator On/Off Control	Auto/Manual
Illuminator Number	2 (IR light)
Angle Adjustment	Pan: 0°–360° Tilt: 0°–90° Rotation: 0°–360°

Lens

Lens Type	Fixed-focal
Lens Mount	M12
Focal Length	2.8 mm; 3.6 mm
Max. Aperture	F2.0
Field of View	2.8 mm: H: 102°; V: 60°; D: 129° 3.6 mm: H: 83°; V: 48°; D: 104°
Iris Control	Fixed
Close Focus Distance	2.8 mm: 0.5 m (1.64 ft) 3.6 mm: 0.7 m (2.30 ft)

	Lens	Detect	Observe	Recognize	Identify
DORI Distance	2.8 mm	41.4 m (135.83 ft)	16.5 m (42.13 ft)	8.3 m (27.23 ft)	4.1 m (13.45 ft)
	3.6 mm	50.9 m (166.99 ft)	20.3 m (66.60 ft)	10.2 m (33.46 ft)	5.1 m (16.73 ft)
	*DORI (Detect, Observe, Recognize, Identify) is a standard system (EN-62676-4) for defining the ability of a person viewing the video to distinguish persons or objects within a covered area. The numbers in this table do not reflect intelligent function distances. For intelligent function distances, refer to installation and commissioning manual/project design tool.				

Video

Video Frame Rate	CVI: PAL: 1080p@25 fps; NTSC: 1080p@30 fps; AHD: PAL: 1080p@25 fps; NTSC: 1080p@30 fps; TVI: PAL: 1080p@25 fps; NTSC: 1080p@30 fps; CVBS: PAL: 960H; NTSC: 960H
Resolution	1080p (1920 × 1080); 960H (960 × 576/960 × 480)
Day/Night	Auto(ICR)/Color/B/W
BLC	BLC; HLC; DWDR
WDR	DWDR
White Balance	Auto;Area white balance
Gain Control	Auto/Manual
Noise Reduction	3D NR
Illumination Mode	Smart IR
Mirror	Yes
Privacy Masking	Off/On (8 areas, rectangle)

Certification

Certifications	CE-LVD: EN 62368-1; CE-EMC: EN 55032; EN 55035;

Audio

Built-in Mic	Yes
Camera Audio	CVI; TVI
Pick-up Distance	8 m (26.25 ft)

Port

Video Output	Video output choices of CVI/TVI/AHD/CVBS by one BNC port

Power

Power Supply	12 VDC (±30%)
Power Consumption	Max 2.8 W (12 VDC, IR on)

Environment

Operating Temperature	–40 °C to +60 °C (–40 °F to +140 °F)
Operating Humidity	<95% (RH), non-condensing
Storage Temperature	–40 °C to +60 °C (–40 °F to +140 °F)
Storage Humidity	<95% (RH), non-condensing
Protection	IP67
Anti-corrosion Level	Basic Protection *The products are designed for general use and are applicable even in areas with no specific requirements for anti-corrosion protection.

Structure

Casing Material	Metal
Product Dimensions	166.4 mm × 69.7 mm × 70.0 mm (6.55" × 2.75" × 2.75") (L × W × H)
Net Weight	0.33 kg (0.73 lb)
Gross Weight	0.43 kg (0.95 lb)
Installation	Wall mount; ceiling mount; vertical pole mount

Ordering Information

Type	Model	Description
HDCVI CAMERA	DH-HAC-HFW1200RMN-A	2MP IR HDCVI Fixed-focal Bullet Camera,NTSC
	DH-HAC-HFW1200RMP-A	2MP IR HDCVI Fixed-focal Bullet Camera,PAL
Accessories (Optional)	DH-PFA130-E	Water-proof Junction Box
	DH-PFA151	Corner Mount Bracket
	G3416GW	G3/4" Water Joint
	DH-PFA157	Pole Mount Bracket
	DH-PFA134	Junction Box
	DH-PFM800-E	1 Channel Passive HDCVI Balun
	DH-PFM321-EN	DC12V1A power adapter
	DH-PFM320D-EN	DC12V2A power adapter
	PFM904	Integrated Mount Tester

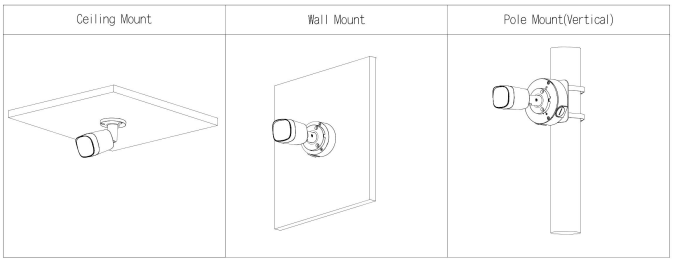

Accessories

Optional:



DH-PFA130-E
Water-proof Junction Box



DH-PFA134
Junction Box



DH-PFA151
Corner Mount Bracket



DH-PFA157
Pole Mount Bracket



DH-PFM320D-EN
DC12V2A power adapter



DH-PFM321-EN
DC12V1A power adapter



DH-PFM800-E
1 Channel Passive HDCVI Balun



G3416GW
G3/4" Water Joint



PFM904
Integrated Mount Tester

Dimensions (mm[inch])

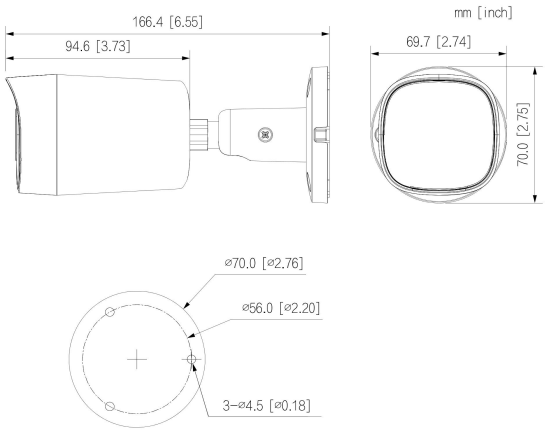

Rev 002.000 © 2025 Dahua. All rights reserved. Design and specificatons are subject to change without notce.
Pictures in the document are for reference only, and the actual product shall prevail.