DH-IPC-HDBW1239E1-A-IL

2MP Entry Smart Dual Light Fixed-focal Dome Network Camera



- 2-MP 1/2.8" CMOS image sensor, low luminance, and high definition image.
- Outputs max. 2 MP (1920 × 1080)@25/30 fps.
- H.265 codec, high compression rate, ultra-low bit rate.
- Built-in IR LED and warm light, and the max. IR distance is 30 m, the max. warm light distance is 20 m.
- DWDR, 3D NR, HLC, BLC, digital watermarking, applicable to various monitoring scenes.
- ROI, SMART H.264+/H.265+, flexible coding, applicable to various bandwidth and storage environments.
- Abnormality detection: Motion detection, video tampering, audio detection, network disconnection, IP conflict and illegal access.
- Built in Mic.
- 12 VDC/PoE power supply, easy for installation.
- IP67 and IK08 protection.
- Supports human detection.

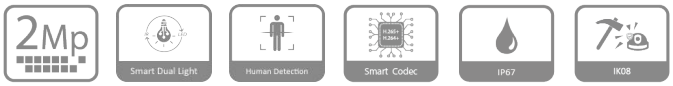

Series Overview

With features of simple installation, easy operation, and high performance-cost ratio, Dahua Entry series network camera is applicable to small and medium-sized scenes, such as homes/ residences, small-sized retail stores, and other small and medium-sized enterprises.

Functions

Smart Dual Light

Dahua Smart Dual Light technology adopts smart algorithm to detect targets. Usually, the IR illuminator is on at night; when the target appears in the monitoring area, the white light is on, and the camera records the full-color video and information of key events. That is, the camera links snapshot and video with full-color image. When the target is out of the monitoring area, the white light is off and the IR illuminator is on, which reduces light pollution efficiently.

Human Detection

Dahua intelligent algorithms extract moving human targets from videos and filters out alarms that are triggered by non-human targets to increase the accuracy and effectiveness of alarms.

Smart H.265+ & Smart H.264+

With advanced scene-adaptive rate control algorithm, Dahua smart encoding technology realizes the higher encoding efficiency than H.265 and H.264, provides high-quality video, and reduces the cost of storage and transmission.

Protection (IP67, Wide Voltage)

IP67: The camera passes a series of strict test on dust and soak. It has dust-proof function, and the enclosure can work normally after soaking in 1 m deep water for 30 minutes.

Wide voltage: The camera allows ±30% (for some power supplies) input voltage tolerance (wide voltage range), and it is widely applied to outdoor environment with instable voltage.

Technical Specification

Camera

Image Sensor	1/2.8" CMOS
Max. Resolution	1920 (H) × 1080 (V)
ROM	128 MB
RAM	128 MB
Scanning System	Progressive
Electronic Shutter Speed	Auto/Manual 1/3 s–1/100,000 s
Min. Illumination	0.005 lux@F1.6 (Color, 30 IRE) 0.0005 lux@F1.6 (B/W, 30 IRE) 0 lux (Illuminator on)
S/N Ratio	>56 dB
Illumination Distance	Up to 30 m (98.43 ft) (IR) Up to 30 m (98.43 ft) (Warm light)
Illuminator On/Off Control	Auto;Manual
Illuminator Number	3 (IR LED); 4 (Warm light)
Angle Adjustment	Pan: 0°–355° Tilt: 0°–65° Rotation: 0°–355°

Lens

Lens Type	Fixed-focal
Lens Mount	M12
Focal Length	3.6 mm; 2.8 mm
Max. Aperture	F1.6
Field of View	2.8 mm: H: 104.5°; V: 58°; D: 122° 3.6 mm: H: 86.6°; V: 46.2°; D: 103.4°
Iris Control	Fixed
Close Focus Distance	2.8 mm: 0.7 m (2.30 ft) 3.6 mm: 1.1 m (3.61 ft)

	Lens	Detect	Observe	Recognize	Identify
DORI Distance	2.8 mm	42.5 m (139.44 ft)	17.0 m (55.77 ft)	8.5 m (27.89 ft)	4.2 m (13.78 ft)
	3.6 mm	53.8 m (176.51 ft)	21.5 m (70.54 ft)	10.8 m (35.43 ft)	5.4 m (17.72 ft)
	*DORI (Detect, Observe, Recognize, Identify) is a standard system (EN-62676-4) for defining the ability of a person viewing the video to distinguish persons or objects within a covered area. The numbers in this table do not reflect intelligent function distances. For intelligent function distances, refer to installation and commissioning manual/project design tool.				

Intelligence

Human Detection	Support the classification and accurate detection of human
Smart Search	Work together with Smart NVR to perform refine intelligent search, event extraction and merging to event videos

Video

Video Compression	H.265; H.264; H.264H; H.264B; MJPEG (Only supported by the sub stream)
Smart Codec	Smart H.265+; Smart H.264+
Video Frame Rate	Main stream: 1920 × 1080@(1–25/30 fps) Sub stream: 704 × 576@(1–25 fps)/704 × 480@(1–30 fps) *The values above are the max. frame rates of each stream; for multiple streams, the values will be subjected to the total encoding capacity.
Streaming Capability	2 streams
Resolution	1080p (1920 × 1080); 1.3M (1280 × 960); 720p (1280 × 720); D1 (704 × 576/704 × 480); VGA (640 × 480); CIF (352 × 288/352 × 240)
Bit Rate Control	VBR;CBR
Video Bit Rate	H.264: 32 kbps–4096 kbps; H.265: 12 kbps–4096 kbps
Day/Night	Auto(ICR)/Color/B/W
BLC	Yes
HLC	Yes
WDR	DWDR
White Balance	Auto; natural; street lamp; outdoor; manual; regional custom
Gain Control	Auto/Manual
Noise Reduction	3D NR
Motion Detection	OFF/ON (4 areas, rectangular)
Region of Interest (RoI)	Yes (4 areas)
Smart Illumination	Yes
Smart Dual Light	Yes
Image Rotation	0°/90°/180°/270° (Support 90°/270° with 1080p resolution and lower)
Mirror	Yes
Privacy Masking	4 areas

Audio

Built-in MIC	Yes, built-in Mic
Audio Compression	G.711a; G.711Mu; PCM; G.726

Alarm

Alarm Event	Network disconnection; IP conflict; illegal access; motion detection; video tampering; audio detection; SMD (human); security exception;

Network

Network Port	RJ-45 (10/100 Base-T)
SDK and API	Yes
Network Protocol	IPv4; IPv6; HTTP; TCP; UDP; ARP; RTP; RTSP; RTCP; RTMP; SMTP; FTP; DHCP; DNS; DDNS; NTP; Multicast; ICMP; IGMP; P2P; Auto Registration
Interoperability	ONVIF (Profile S & Profile T); CGI
User/Host	6 (Total bandwidth: 24 M)
Storage	FTP
Browser	IE; Chrome; Firefox

Management Software	Smart PSS Lite; DSS; DMSS
Mobile Client	iOS;Android
Security	Digest;WSSE;Account lockout;Security logs;Generation and importing of X.509 certification;HTTPS;Trusted boot;Trusted execution;Trusted upgrade
Certification	
Certifications	CE-LVD: EN62368-1; CE-EMC: Electromagnetic Compatibility Directive 2014/30/EU
Power	
Power Supply	12 VDC (±30%); PoE (802.3af)
Power Consumption	Basic: 2.3 W (12 VDC); 3.1 W (PoE); Max.: 6.8 W (12 VDC); 7.9 W (PoE) (H.265 + intelligence on + illuminator intensity)
Environment	
Operating Temperature	–40 °C to +60 °C (–40 °F to +140 °F)
Operating Humidity	≤95% (RH), non-condensing
Storage Temperature	–40 °C to +60 °C (–40 °F to +140 °F)
Storage Humidity	≤95% (RH), non-condensing
Protection	IP67; IK08
Structure	
Casing Material	Metal + Plastic
Product Dimensions	81.0 mm × Φ109.9 mm (3.19" × Φ4.33")
Net Weight	0.33 kg (0.73 lb)
Gross Weight	0.48 kg (1.06 lb)

Ordering Information

Type	Model	Description
IP CAMERA	DH-IPC-HDBW1239E1-A-IL	2MP Entry Smart Dual Light Fixed-focal Dome Network Camera
Accessories (Optional)	DH-PFB220C	Ceiling Mount Bracket
	DH-PFA109	Mount Adapter
	DH-PFB305W	Wall Mount Bracket
	DH-PFA151	Corner Mount Bracket
	DH-PFA150	Pole Mount Bracket
	DH-PFB203W	Wall Mount Bracket
	DH-PFA156	Pole Mount Bracket
	DH-PFA136	Junction Box
	DH-PFM321-EN	DC12V1A power adapter
	DH-PFM320D-EN	DC12V2A power adapter
	PFM900-E	Integrated Mount Tester

Accessories

Optional:



DH-PFA109
Mount Adapter



DH-PFA136
Junction Box



DH-PFA150
Pole Mount Bracket



DH-PFA151
Corner Mount Bracket



DH-PFA156
Pole Mount Bracket



DH-PFB203W
Wall Mount Bracket



DH-PFB220C
Ceiling Mount Bracket



DH-PFB305W
Wall Mount Bracket



DH-PFM320D-EN
DC12V2A power adapter



DH-PFM321-EN
DC12V1A power adapter



PFM900-E
Integrated Mount Tester

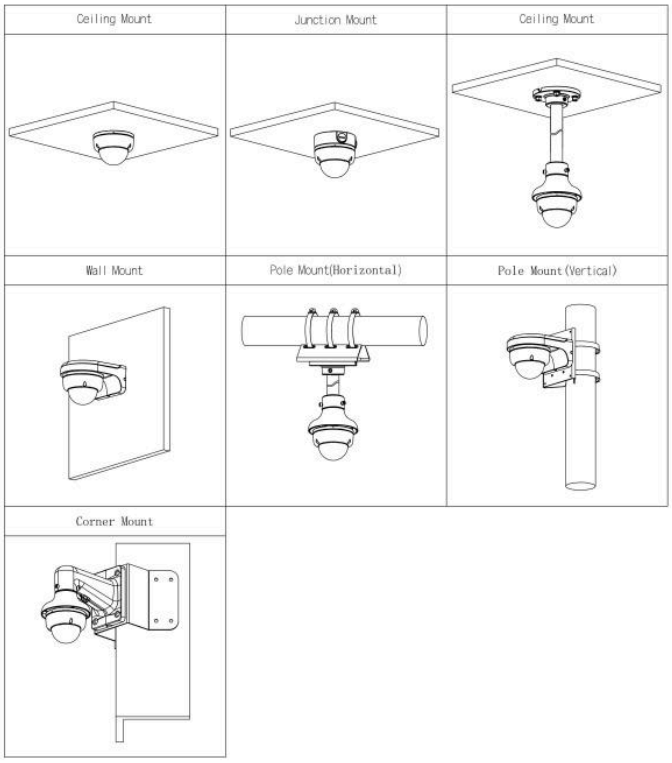

Dimensions (mm[inch])

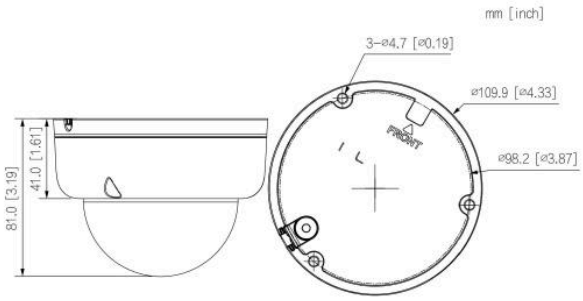

Rev 002.000 © 2025 Dahua. All rights reserved. Design and specificatons are subject to change without notce.
Pictures in the document are for reference only, and the actual product shall prevail.